The University of Chicago

A Horizontal-Vertical Illusion of Brightness in Foveal Vision Apparent in Astronomical Observations of the Relative Luminosity of Twin Stars

APR 6 1917

A DISSERTATION
SUBMITTED TO THE FACULTY
OF THE
GRADUATE SCHOOL OF ARTS AND LITERATURE
IN CANDIDACY FOR THE DEGREE OF
DOCTOR OF PHILOSOPHY
(DEPARTMENT OF PSYCHOLOGY)

By
JOSEPH WANTON HAYES
1911

Published as Whole Number 85 of the Psychological Monographs

STANFORD UNIVERSITY LIBRARIES
3781
C53 H
UNCLASSED

The University of Chicago

A Horizontal-Vertical Illusion of Brightness in Foveal Vision Apparent in Astronomical Observations of the Relative Luminosity of Twin Stars

A DISSERTATION

SUBMITTED TO THE FACULTY

OF THE

GRADUATE SCHOOL OF ARTS AND LITERATURE

IN CANDIDACY FOR THE DEGREE OF

DOCTOR OF PHILOSOPHY

(DEPARTMENT OF PSYCHOLOGY)

By

JOSEPH WANTON HAYES

1911

Published as Whole Number 85 of the Psychological Monographs

PRINCETON
UNIVERSITY
PRESS

CONTENTS

1—PROBLEM 1

2—FIRST APPARATUS 4

Description 4

Procedure 6

Instructions to Subject 7

Subjects 8

Results 10

3—SECOND APPARATUS 14

Description 14

Procedure and Instructions to Subjects..... 17

Subjects 25

Results 27

4—THIRD APPARATUS 35

Description 35

Procedure and Instructions to Subjects..... 37

Subjects 41

Results 42

5—CONCLUSION 116

PROBLEM

The problem under investigation was suggested by certain phenomena which have from time to time appeared in astronomical observations. The phenomena in question are briefly as follows. In making judgments on the relative luminosity of twin stars it has frequently been reported that two stars which, seen in the horizontal plane, were estimated to be of equal luminosity were, when viewed in a vertical arrangement, judged to be unequal in luminosity and, in the majority of cases, this inequality favored the lower star. This apparent inequality of the two stars in the vertical arrangement is sometimes as great as two or three magnitudes. The occurrence of these apparently contradictory estimates of two stars, dependent on their relative positions, has been reported by numerous observers. It was brought directly to the notice of Professor Angell by Professor Barnard of the Yerkes Observatory at Lake Geneva. One element which made the phenomena of immediate interest psychologically was the fact that these contradictory judgments do not appear merely as characteristics of the less trained observers, which disappear in continued experience and the gaining of increased facility in this type of observation. On the contrary, they have been reported as a rather persistent factor in the judgments of the most highly trained and accurate observers. This would seem to point to some physiological or psychological basis for the persistent error noted and the problem undertaken in these experiments was to find if any such explanation could be discovered for the observed facts. With this in view, several forms of apparatus were built, the object of which was to expose to the subject two lights, in appearance not too unlike the stars in question, which could be altered in both relative and absolute size and intensity and which could be revolved in a plane at right angles to the subject's line of vision. This permitted of two vertical, two horizontal and an indefinite number of oblique positions in which the two object lights might be shown. The factor of relative size was in-

troduced not because it entered noticeably in the star phenomena but simply because, through the evident close connection of the two facts, the size relations might throw some light on the brightness phenomena under investigation.

FIGURE 1

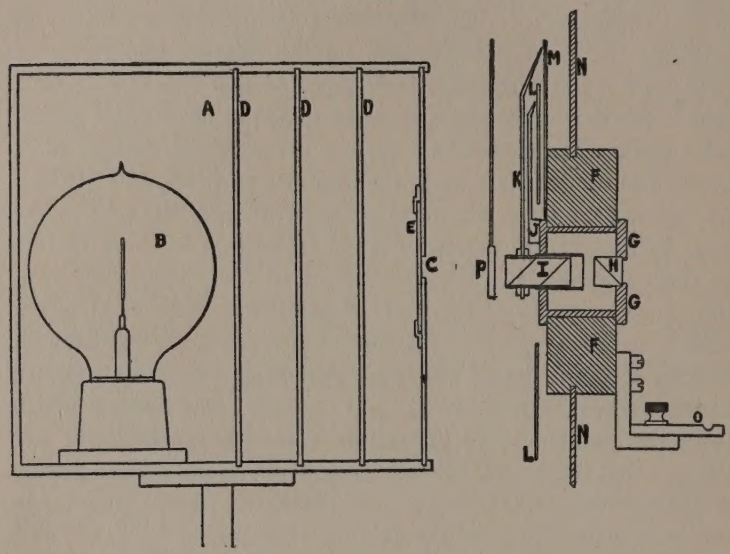

FIRST APPARATUS

A—Light box
B—Lamp
C—Light aperture
DDD—Ground glass diffusion screens
E—Colored gelatine
F—Wooden beam anchored to side walls and floor
G—Eye-piece
H—Double-image prism revolving with eye-piece
I—Nichol prism mounted in separate tube and revolving independently of eye-piece
J—Indicator showing position of eye-piece
K—Indicator showing position of Nichol prism
L—Stationary scale (360°) for indicator J
M—Scale (90°), attached to eye-piece, for indicator K
N—Screen reaching from floor to ceiling
O—Adjustable mouth-piece
P—Small shutter for cutting off light from eye-piece

A possible solution of the problem was looked for along two lines chiefly. First, along the line of a possible difference in sensitivity of the upper and lower halves of the retina, due to the normal difference in the stimulation to which these portions are subjected in ordinary experience. Secondly, an investigation as to whether or not these brightness phenomena could be brought into any sort of relation with the familiar horizontal-vertical illusions of size, such as the horizontal-vertical line illusions, and more particularly, illusions of the "figure 8—letter S" type. A further explanation was also sought in the characteristics of foveal, as contrasted with indirect, vision. It is known that the phenomena in question, under the conditions of astronomical observation, are predominantly, if not exclusively, concerned with the fovea. It was also considered germane to the problem to determine the effect of practice in making this type of judgment, on the appearance of the phenomena in question.

FIGURE 2

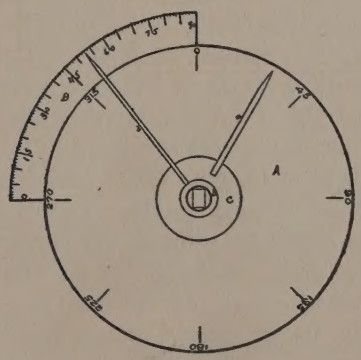

FIRST APPARATUS

A—Stationary scale (360°) showing the relative positions of the two lights seen by the subject

a—Indicator, attached to eye-piece, moving over scale A

B—90° scale attached to eye-piece and moving with this, showing position of the Nichol prism relative to the double-image prism mounted in the eye-piece

b—Indicator, attached to the tube containing the Nichol prism, moving over scale B

C—Eye-piece

D—Tube containing Nichol prism

FIRST FORM OF APPARATUS

Description

In the first apparatus employed the objective source of light was single. It consisted of a metal box, painted dead black inside and placed on a standard so as to bring its center on a level with the eye of the observer. In this box was mounted a 50-candlepower incandescent light of the type known as "stereopticon," in which the filament is coiled in a circular disk, thus offering a uniform luminous surface on two sides. The front of the box, which slid in metal grooves, had a circular opening cut in its center. By means of other similar fronts, with different sized openings, the size of the object light could be varied. The filament of the lamp was centered with this opening, with one of the circular surfaces at right angles to the line from the subject's eye to the center of the box. Several ground glass slides were placed in grooves at half-inch intervals behind and parallel with the front of the box, between the opening and the lamp. By varying the number of these diffusing screens the intensity of the light was controllable. Additional grooves were provided for colored gelatine screens. Twenty feet in front of the light box was placed the subject's chair, the height of which could be so altered as to put the eye of the subject, seated comfortably, on a level with the light. In front of the subject's head and supported by mental clamps, was a rotating eye-piece in which was mounted a double-image prism of Iceland spar, 1½ inches in diameter. By means of this the single objective light was shown to the subject as two. By revolving the eyepiece the relative positions of the two lights seen by the subject was correspondingly altered, admitting of vertical, horizontal and oblique arrangements. In a metal tube, set into the front of the eyepiece and concentric with the latter, a Nichol prism was mounted. By rotating this Nichol prism through 90 degrees the

relative intensity of the two rays produced by the double-image prism could be continuously altered, from the condition in which one light was entirely cut off and the other appeared at full intensity (minus the slight absorption of the Nichol prism), through the condition in which the two lights appeared objectively equal, to the condition in which the light which was previously cut off appeared at full intensity and the other was entirely cut off.

Separate indicators were attached to the eyepiece and to the tube containing the Nichol prism. The one attached to the eyepiece moved over a stationary, circular scale marked in 10° divisions. The indicator for the revolving tube containing the Nichol prism was furnished with a quadrant scale marked in divisions of 6 minutes each. This quadrant scale was attached to the eyepiece and moved whenever the latter was rotated. It thus retained the same position relative to the two object lights (the two pencils of light coming to the subject's eye from the double-image prism), in whatever position these lights were shown to the subject. From the first scale the relative positions of the two lights was known: from the second, their relative intensity could be computed. Thus, in the 0° position of the eye-piece the lights were horizontal. If the indicator attached to the Nichol prism were then placed at 45°, the two lights were of equal intensity. At 0° of the Nichol prism the right hand light had disappeared entirely and at 90° the left hand light. Movements of the Nichol prism of less than a degree in either direction from the 45° position produced very slight inequalities of the two lights.

The subject's head was placed in a rigid support anchored to the floor. Attached to this by adjustable clamps was an exchangeable mouthpiece, made from wax impressions, into which the subject's teeth were set. A padded clamp came up snugly under the chin. Even slight movements of the head were thus practically avoided. As the apparent distance between the images was a function of the distance from the objective light to the eyepiece, this admitted of alteration within certain limits. A

near position of the light was easily obtained in which the edges of the two lights overlapped. Increase in this apparent separation of the lights was, of course, not at all proportionate to an increase in the distance of the object light from the eye-piece. Beyond 20 feet a relatively large increase in the latter dimension produced scarcely noticeable alteration in the former. It was, therefore, impossible to produce an apparent separation of the lights comparable in extent with that used in the second type of apparatus. They were never judged to be more than 6 - 8 cm. apart. It was impossible to alter the relative size of the lights, except in so far as an apparent alteration took place indirectly, as a result of the changes in intensity. The subject's view of the light, otherwise than through the eye-piece, was shut off by a large screen, reaching from floor to ceiling, which fitted closely around the eye-piece and its support. The light could be shut off from the eye-piece by a shutter in front of the tube. The tube and eyepiece were rotated by means of pulleys, operated from in front of the screen where, also, the indicators and scales appeared and could be read by the operator by the use of a small spot light.

Procedure

With this form of apparatus the general procedure was as follows. The chair, mouth-piece and head-rest were adjusted for the particular subject in question so that, while comfortably seated and without unnecessary strain, the eye to be used was 1 cm. directly behind the eye-piece and the teeth fitted firmly into the mouth-piece. The room, located in the basement of the laboratory, approximated the darkness of an ordinary photographic dark room. The subject was then given 5 minutes to adapt. No effort was made to secure total dark adaptation as the conditions of astronomical observation, in which the phenomena under examination appear, do not involve such complete adaptation. After 5 minutes the subject placed his head in the rest, set his teeth in the mouth-piece and the padded clamp was pushed snugly up under the chin, but without causing discomfort

or strain. The shutter was dropped in front of the revolving tube and the object light switched on.

After the eyepiece and Nichol prism had been set in the desired position, the "ready" signal was given, the shutter raised and the lights appeared simultaneously. There was never any report given that one edge of the lights appeared before the other or that the subject was conscious of the direction in which the shutter moved. They were "not there"—then "there." As soon as the subject's judgment had been given the shutter was dropped and the eye-piece and Nichol prism set for a new position. This was done in front of the screen so that the subject never knew what relation the new position bore to the previous one. Half-minute intervals were given between the judgments in a series of 12, and 3-minute intervals between series. Three such series were given at each sitting, which lasted, therefore, approximately 45 minutes. In a preliminary set of experiments, carried out to determine the point, this rate of exposure was not found to produce fatigue. The chin-rest was dropped and the subject took his head from the head-rest during the 3-minute intervals between series. The right eye was used for the main series of tests but a control series, consisting of about one-third the number of judgments that formed the main series, was taken with the left eye. The order of exposures, both as to the successive positions shown and the relative luminosity of the lights, was regular but was varied in each successive series. All the judgements with this apparatus were, of course, made with direct vision, *i.e.* the images of both lights were always foveal.

Instructions to the Subject

The subject was told that he would see two lights of a certain color but no indication was given him of the position in which they would appear nor of their apparent distance apart. He was asked to make judgments on, (1) the relative luminosity and, (2) the relative size of the two lights shown and, as far as possible, to make these judgments independently of each other, though the judgments might be reported to the operator at one time. He was asked to report the two judgments in the order

in which they were made but no instruction was given as to which should be made first. As far as possible he was to abstract from the relative saturation of the two lights, when such differences appeared, and to make his judgment solely on their relative luminosity. Differences in irradiation were to be neglected in making judgments on luminosity but, where such differences seemed to effect the decision, they were to be reported. He was told that the lights shown him might, in any case, be either equal or unequal and that the inequality, when present, might favor either of the two lights. He was asked to look from one light to the other and give his judgment on size or luminosity or both as soon as he felt any certainty as to equality or inequality. He was requested *not* to attempt to make the lights look either equal or unequal, but in cases in which his judgment changed at any time before the shutter fell he was to report the nature of the change.

In the first part of the work with this apparatus the subjects were all unaware that the objective source of light was single. During the experiments one of them accidentally learned this fact and all were then told. A considerable number of exposures was given, however, in which the Nichol prism was set several degrees away from 45 and the lights which they saw were, beyond possibility of doubt, unequal in luminosity. In these cases the disparity in luminosity of the two lights always carried with it a judgment of inequality in size so that all of the subjects were convinced of the possibility, in spite of the unitary light source, of two lights being shown them that were unequal in both size and brightness.

The subject was asked to report in his introspection any isolated or recurrent characteristic of his process which came to notice; any cases of association, peculiarities of physical or mental condition, appearance of fatigue, noticeable after-images, etc.

Subjects

The subjects in the experiments with the first apparatus were Dr. M. R. Fernald, Dr. E. M. Chamberlain, Dr. C. J. Weiden-

sall and Dr. M. H. S. Hayes, all graduate women students in the Psychological Laboratory of the University of Chicago. A series of results was taken with the writer as subject but these were, of course, not comparable with the other series. These were made in order to more adequately interpret the introspections of the different subjects. All of the subjects had served in laboratory experiments and were competent observers and introspectors. All were normally right-handed. No astigmatism or muscular trouble was reported, and only one subject wore glasses. Subject C was slightly hypermetropic and wore glasses intermittently for reading. No differences in visual acuity of the two eyes was reported by any subject and optical tests on reading with graded types failed to demonstrate any such difference. C's. and W's. judgments were uniformly given with decided promptness and a large amount of subjective certainty. H's. and F's. judgments were given more slowly, more hesitatingly and with less apparent certainty of their correctness. All four subjects occasionally made the remark that the appearance of the lights had changed during the process of judging and it was sometimes reported that this seemed to be the immediate result of involuntary eye movement. No variation in procedure occurred affecting one subject only. The introspective account of all four subjects was relatively full at first. In the later series a large part of the introspective reports was made up of repetitions or slight variations from the earlier accounts. F. asked for more specific instructions on the relation of saturation to the judgments on relative luminosity and these same instructions were then given to the three other subjects. The remark was frequently made by all of the subjects that in many cases the judgment of preference for one light was little more than a vague suggestion of greater intensity or size and no certainty was felt as to its objective validity. Three of the subjects remarked on the coincidence that the judgments of greater size and luminosity, where both appeared, generally went together and the larger was rarely judged to be the dimmer, or vice versa. None of the subjects realized that only the factor

of intensity in the two lights suffered unequal modification and that, throughout the experiment, they were always equal in size.

Results

The results with the first form of apparatus were wholly negative. The phenomenon failed to appear in any consistent way, not only throughout the results of all four subjects taken together but throughout the results of any one subject. Not only did the phenomenon in question fail to appear with any consistency, but the judgments were equally erratic in their tendency to favor any one light, either in the horizontal, vertical or oblique positions. Lights of relatively distinct inequality were occasionally misjudged, the dimmer being judged the brighter, and the reverse, while pairs of slightly unequal lights were frequently misjudged in this way. The occasional remark of subjects, that the relative intensity of the two lights seemed to change during the process of making a judgment and that this happened with equal frequency in the different positions, was supplemented by the opinion of two subjects that the change occurred as the direct result of slight involuntary eye movements. A series of judgments was therefore made on two of the subjects and on the writer to determine the extent to which the judgments could be altered by voluntary eye movements, the conditions of observation being the same as in the original judgments, *i.e.* mouthpiece, chin-rest, etc. The results did not show the alteration of judgments as the result of voluntary eye movements in as striking a manner as had been expected from the introspective reports of the subjects, and this may in part account for the failure to discover more promptly this radical fault in the technique with the first type of apparatus. This series of experiments did, however, show the modifiability of judgments by eye movements with sufficient clearness wholly to invalidate the results with this type of apparatus. The results of this first set of experiments are, consequently, not given.

FIGURE 3

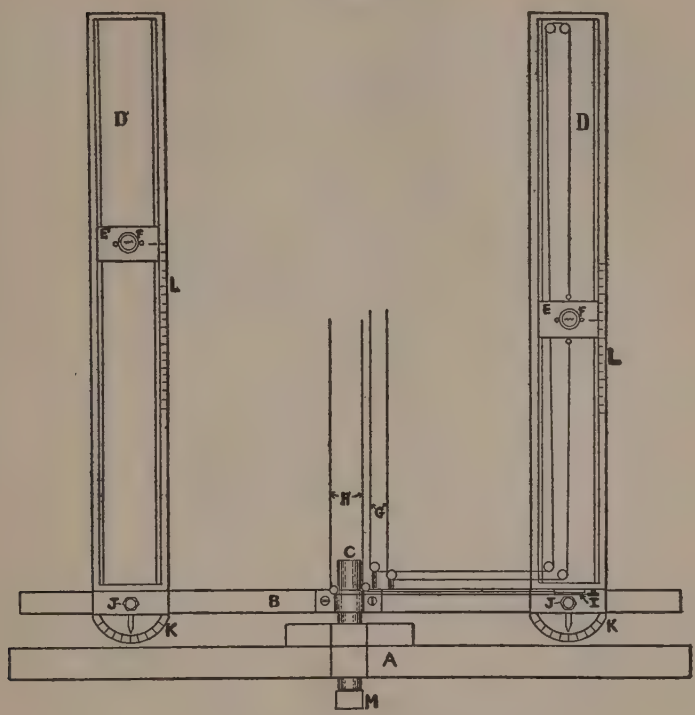

SECOND APPARATUS

A—Tripod
B—Revolving arm
C—Steel axis on which B revolves
D—Variable light tunnel
D'—Standard light tunnel
E—Variable light-car
E'—Standard light-car
FF—Miniature electric lights
G—Cords, connected with wheel at side of subject's chair, for moving the variable light-car
H—Cords, connected with lever at side of subject's chair, for controlling iris diaphragm on variable light tunnel
I—Iris diaphragm
JJ—Pivots for adjusting angles between light tunnels and revolving arm

KK—Scales which show the angles formed by the light tunnels and the revolving arm

LL—Mm scales, running the length of the light tunnels, which show the position of the light-cars

M—Light-box with pinhole light, used for central fixation in indirect vision judgments.

The peripheral fixation light boxes (shown in figure 4) are omitted.

FIGURE 4

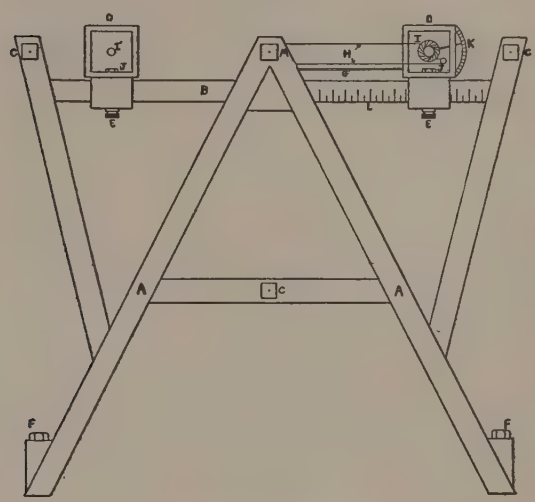

SECOND APPARATUS

A—Tripod

B—Revolving arm

CCC—Light boxes with pinhole apertures for peripheral fixation. The fourth peripheral light box (not shown) was hung from the ceiling

DD—Light tunnels containing the two movable light cars

EE—Milled screws for securing light tunnels on revolving arm

FF—Bolts securing tripod to cement floor

G—Cords, connecting with wheel at side of subject's chair, for moving the variable light car

H—Cords, connecting with lever at side of subject's chair, for controlling iris diaphragm on variable light tunnel

I—Iris diaphragm

I′—Light aperture of standard light tunnel

JJ—Pivots far adjusting angles between light tunnels and revolving arm

K—Scale for showing size of opening in iris diaphragm

L—Scale, extending the entire length of revolving arm, for setting light tunnels at different distances apart

M—Light-box with pinhole light, used for central fixation in indirect vision judgments

The individual exposure shutters for the two object lights are not shown. The fan-shaped shutters used were attached to the bases of the light tunnels and were connected by belts so that they could be moved simultaneously by the operator.

The third leg of the supporting tripod, which projected forward, is not shown in either of the drawings of this apparatus.

SECOND FORM OF APPARATUS

Description

In this apparatus two objective lights were used which permitted of alteration in relative and absolute size, as well as in relative and absolute intensity. It was also possible to vary the actual distance between the lights from 30 cm. to 1 m. The sources of light were two miniature incandescent lamps of 6 candlepower each, connected in parallel wiring with a set of storage batteries. These lamps were mounted on small cars which moved along tracks 16 cm. wide, running east and west. The front end of each pair of tracks was secured, by means of pivot running through a crosspiece, to a revolving arm 1 m. 30 cm. long. This arm, revolving in a plane the horizontal dimension of which ran north and south, was hung at its center from a metal axis which projected backward from the apex of a tripod. This, in turn, was firmly anchored to the floor. By means of side pieces the two pairs of tracks were inclosed at top, bottom, sides and rear with heavy black cloth forming two light proof tunnels of sufficient height to permit the cars to run freely backward and forward on the tracks. One of these tunnels was closed in front by a black screen which had a round aperture cut in its center. The size of this, the standard light, was changed by substituting other screens with different sized aperatures. Grooves were provided for screens of colored gelatine. The front of the second tunnel was closed in the same manner except that an iris diaphragm was set into the opening in the screen, admitting of a continuous change in the size of the light shown the subject, from 0 to 3 cm. This diaphragm was controlled by a lever at the side of the subject's chair. This was connected with the diaphragm by means of cords running over pulleys and so arranged that neither change in the separation nor in the position of the lights altered the control. A scale at the front of the tracks registered in degrees

the amount of movement of the diaphragm and could be read by the operator.

The lamp-car of the "Standard Light" could be fixed at any position from 25 to 120 cm. back of the opening in the screen. The car in the other tunnel was moved back and forward through the same range by means of two cords running over pulleys, which passed out the front of the tunnel, thence to the axis of the revolving arm, to the rear wall of the room, to the ceiling and, finally, to a wheel clamped at the side of the subject's chair. By rotating this wheel the subject was able to run the car forward or backward until a position was reached where he judged this light to be equal in intensity to the standard light. In the following descriptions this light, the luminosity and size of which could be controlled from the subject's chair, will be referred to as the Variable Light or the Variable Car in contradistinction to the Standard Light or Car which was set in a fixed position by the operator before each judgment or series of judgments. The positions of the two cars were read from millimeter scales running the length of the two pairs of tracks.

The distance between the two lights was altered by moving the pairs of tracks in or out on the revolving arm, where a scale gave their position. For each position the rear ends of the tracks were swung outwards from the main axis far enough to make the long axis of each tunnel coincide with the continuation of a line from the subject's eye-piece to the center of the opening in the front of each tunnel. The amount of this angular displacement for each separation of the lights was indicated by a quadrant scale placed under the front of the tracks, centered around the pivot by which the tracks were attached to the revolving arm. The cars thus moved backward and forward along the direct line of sight of the subject. By swinging the revolving arm the standard light could be placed directly above or below the other, to right or left of it in the horizontal position, or in any one of the oblique positions. The tracks were made rigid at the rear by wire guys to the ceiling and walls. These had to be shifted at each partial revolution of the arm and tracks.

Owing to the complexity of the connection of the light car with the wheel on the subject's chair, a second form of control was later substituted. The wheel was connected by a cord with an indicator running along a scale on the wall, of the same length as the tracks themselves. The operator then moved the car by a short cord in accordance with the wishes of the subject as indicated on the wall scale. The diaphragm was moved in accordance with a similar indicator connected with the lever at the side of the subject's chair and running on a second wall scale.

The arrangement of the subject's chair was much the same as in the first apparatus, except that the mouthpiece was not used as in the previous case and a stationary eye-piece without prism replaced the revolving prism eye-piece of the earlier form. On the front end of the main axis (of the revolving arm) and on a line connecting the two object lights a miniature incandescent lamp was mounted. A small light-tight box was fixed over this, having a pinhole opening in the center of its front side. Ground glass screens provided for controlling the intensity. This pinhole light served as a central fixation point for judgments in indirect vision. Similar fixation points were placed 50 cm. directly above and below the central fixation point and to right and left in a horizontal line. Individual shutters were placed in front of the two object lights and connected in such a way that they could be raised at the same moment by the movement of a single lever, thus simultaneously exposing the two object lights. A large screen midway between the subject's chair and the revolving light apparatus cut off objects outside the circle in which the lights revolved and a shutter in front of the eye-piece was dropped between judgments. The connections of the two lamps on the light cars were run through rheostats. They could also be placed, separately and without breaking their connections, in a Max Kohl photometer which was supplied with a standard lamp connected with separate storage battery. The photometer could also be placed in front of the apparatus and the relative intensity of the two lights at the openings thus measured. The intensity of the standard light, placed at the

60 cm. division in the light tunnel, was 2 candlepower, as measured by the photometer. This apparatus, by permitting variations in the relative size and a much greater separation of the two lights, overcame the two chief difficulties of the first apparatus. It was, however, impossible to bring the lights closer together than 30 cm.

Procedure

First Set of Experiments

In the first set of experiments with this apparatus the procedure, as far as it concerned the subject, was much the same as with the first apparatus. The head-rest was adjusted so as to bring the subject's eye directly opposite the eye-piece. Five minutes were given for adaptation, the shutter was dropped, the lamps on the two light-cars switched on, the "ready" signal given, the shutter in front of the subject's eye-piece raised, the judgment on luminosity and size reported, and the shutter dropped again. The lights shown in this set of experiments were objectively equal in both luminosity and size. The object of these experiments was, then, to determine whether the lights would be persistently overestimated in one or more of the four positions (upper, lower, right or left).

The time between judgments was necessarily longer than with the first apparatus owing to the greater time required in setting the light-cars, adjusting the iris diaphragm and swinging the tracks to a new position. The time averaged 2 minutes. It was impossible to make this time absolutely uniform as the rotating mechanism did not work with uniform smoothness and any particular shift might take a longer or shorter time than the preceding one. This was not thought to interfere with the validity of the results as the time was always sufficiently large to prevent fatigue and total dark adaptation was never sought. The subject removed his head from the rest between judgments and resumed the position again at the ready signal. The rest fitted snugly and the possible change of position was very slight. Considering the length of time taken between judgments and

the consequent duration of a series it was felt that absolute fixity of position was impossible without a mouth-piece (if, indeed, it could be obtained even in that way). The necessary strain and discomfort incident to a long series with the mouth-piece was felt to more than offset the disadvantage of such slight shifts in position as were possible with the method used. In order to ascertain the effect of a slight shift in the position of the subject's eye a series of results was taken in half of which the eye-piece and head-rest were moved 2 cm. to the left of the original position, in the other half they were moved the same distance to the right. This alteration of position was many times that which was possible for the subject's head while in the head-rest. The results showed absolutely no corresponding effect, either in general type or mean variation. The sittings lasted about 50 minutes and 16 exposures were made. The order of positions of the lights was, as with the first apparatus, regular but was changed in each successive series.

Instructions to Subject

These were practically identical with those given in the experiments with the first apparatus. The subjects were told what to look for and how to make their judgments, but no indication was given of the nature of the problem or the actual character of the lights in any case. Introspection on the process of judging was asked for; also on any isolated or persistent phenomena directly or indirectly connected with the judging process.

Second Set of Experiments

In this series the subject, instead of simply making a judgment of equality or inequality between two lights which remained constant and objectively equal during the process, altered, by means of the wheel and lever at the side of his chair, the size or intensity of one light until he judged it to be equal to the other in that respect. The procedure was as follows. After the subject had adapted for 5 minutes and the shutter had been dropped, the standard light-car was fixed at a medium position

on the mm. scale running the length of the track and one of the fixed aperture slides, containing an opening midway in diameter between the extreme limits of the iris diaphragm, was placed in the groove at the front of this track. The other light-car was placed at the front of its track, making the light of maximum brightness, and the iris diaphragm was opened to its widest extent. When the lights were exposed, in the regular way, the subject first moved the wheel until the luminosity of the brighter light was reduced to equality (in his estimation) with that of the standard light. The lever was then lowered until the size of this light was likewise reduced to equality with that of the standard light. If, as generally happened, this change in size affected the, previously determined, apparent equality in luminosity, this latter was further altered until a new position was reached which satisfied the subject in regard both to luminosity and size. This sometimes required several alternate manipulations of the wheel and lever. These successive alterations were, however, permitted only in case the additional variation was in the same direction as the first and principal one. If, on the contrary, after the alteration in size the subject felt that the previous change in luminosity had been too great and that his light was now the dimmer, he was not allowed to bring it back again to what he considered a position of equality. In this case the entire judgment on size and luminosity was begun again. When a position of both light-car and diaphragm had been reached which satisfied the subject, the shutter was dropped, any introspection was given, and the operator read from the two scales the position of the variable light-car and the size of the opening in the iris diaphragm which had been judged by the subject to make that light equal to the standard in luminosity and size. The light-car was then moved to the extreme rear of the track and the iris diaphragm reduced to its smallest opening. The subject's procedure in this case was identical with that in the preceding judgment, except that the wheel and lever were moved in the opposite direction and the size and luminosity of the variable light were, consequently, increased to apparent equal-

ity with the standard light instead of being decreased, as in the previous case. After one judgment made by increasing and one by decreasing the size and luminosity of the variable light, the revolving arm and tracks were swung to a new position and two similar judgments made in the new position.

The averages between the positions accepted as equality, on the one hand by reducing and on the other by increasing the variable light, were accepted as the actual judgments of equality. The difference between the actual position of the standard light and aperture and the average of all the positions judged equal in reducing the luminosity and size of the variable light gave the average error for that type of judgment and in the same manner for the judgments formed by increasing the size and luminosity. The average difference between the averages of these two types of judgments and the actual position and size of the standard light gave the average error for this series. The shutter was dropped as soon as the subject signified that he was satisfied with the size and intensity of the lights. The time allowed between a judgment in which the variable light was decreased and the following judgment in which it was increased was 1 minute. Between two pairs of such judgments the time averaged 2 minutes, as in the first series with this apparatus and, for the same reason as in that case, it was not absolutely uniform. The sittings averaged between 50 minutes and 70 minutes and 12 pairs of lights were exposed. The time for carrying out this form of judgment was necessarily considerably longer than that required for the simple judgment of equality or inequality made in the first set of experiments with this apparatus.

Instructions to Subject

These were necessarily quite different from those given in the earlier series. The subject was told that two lights of a certain color would be shown him. In case they appeared unequal,—and in this series the disparity at the start was so gross that they were never judged to be equal,—the subject was to increase the size and luminosity of the smaller and dimmer (or to de-

crease these factors in the larger and brighter light) until he was satisfied of their equality in both respects. It was thus necessary to indicate which was the standard light. In the trial cases, in which this information was not given, the subject not infrequently tried to reduce the brightness of the standard light instead of increasing the other and when he became aware of his error was forced to alter his mental attitude to an extent that often affected his judgment when finally formed. This appeared both in the general type and mean variation of the results and in the introspective account of the subject. He was allowed to decide for himself the best way of making the adjustments—whether, for instance, relatively short, quick movements of the light and diaphragm or a steady, uniform increase or decrease produced the better effects. He was warned that, if he carried the adjustment of the changing light or diaphragm too far in any case, he would not be allowed to drop back again to a satisfactory position but would have to start again from the beginning. The instructions as to irradiation, saturation, etc. were the same as in the previous cases. Also the request was made for reports on any related phenomena, peculiarities or incidental variations in the process, or in his own feeling about the process or result.

A modification in the procedure with this apparatus occurred when the wall indicator was substituted for direct control of the moving light-car by the subject. (See description of apparatus, page 16.) This modification affected the operator only, however, and left the subject's method of making judgments the same as before. Most of the subjects were unaware that any change had been made during the entire series of experiments with this form of apparatus. The one who did find it out did so by accident and not as a result of any difference which occurred in his own procedure. The operator now moved the light-car by means of a short cord running through the tunnel, and the diapraghm by means of a lever extending below the tracks. The light-car was moved so as to correspond, in its position on the mm. scale, which ran lengthwise of the tracks

and in rate of movement, with the position and rate of movement of the indicator on the wall scale as this was moved by the subject. The same was true of the movement of the iris diaphragm, as indicated by the circular scale which showed the size of the iris diaphragm.

Third Set of Experiments

In this set the procedure, as far as concerned the subject directly, was the same as in the first set with this apparatus. The subject made judgments of equality and inequality on two lights, vertically and horizontally placed, which remained constant during the judgment. Unlike the judgments of the first set, however, these were made on lights which were objectively unequal in either size or luminosity. The object was to determine exactly the range of positions of the variable light-car and iris diaphragm inside which this light was preponderantly judged as equal to the standard light, the latter remaining fixed in size and intensity. Also to determine whether this range was greater in the horizontal than in the vertical positions of the lights. Two positions were first determined for the variable light-car, in the first of which this light was always judged brighter, in the second always dimmer than the standard light. Similar limits were established for the iris diapraghm. The variable light-car was placed, in an irregular series, at each mm. division inside this range and compared with the standard light, the size remaining constant during this series and equal to that of the standard light opening. The iris diaphragm was then, in a similar series, placed at each quarter mm. division inside limits (determined as in the previous comparison of luminosities) and compared with the standard light, the brightness remaining constant and equal to the standard light. This was carried out in all four positions of the lights. The detailed procedure in this set was practically identical with that in the first series with this apparatus.

Fourth Set of Experiments

In this series the procedure was identical with that in the second set with this apparatus, after the change from direct control of the car by the subject to control by an indicator, except that the subject's left eye was used instead of the right. No additional instructions were given beyond a request that the subject report any characteristics of the procedure which seemed to be dependent on the change from the right to the left eye.

Fifth Set of Experiments

This consisted of two parts, in both of which the judgments were made in indirect vision. In the first part, the central fixation point, attached to the front of the main axis (see description of apparatus, page 16), midway between the two lights, was used. In the second part the fixation points placed 50 cm. from this axis and on a line at right angles to the revolving arm, were employed. In this second part, one half of the exposures in which the object lights were placed vertically was made with the fixation point at the right; the other half with fixation at the left. In the horizontal exposures, one half had the fixation point above and the other half below. The procedure in both of these series was practically the same. After adaptation the shutter was dropped in front of the subject's eyepiece. The two object lights and one of the fixation lights were switched on and the two shutters in front of the object lights were set. The shutter in front of the subject's eyepiece was then raised and the subject fixated the small fixation light. The ready signal was given and the shutters in front of the object lights released exposing the two lights simultaneously. The subject gave his judgment on size and brightness and the eyepiece shutter was dropped. The lights were swung to a new position and the process repeated. The interval between exposures was the same as in the first set with this apparatus, as the setting of the shutters in front of the lights did not occupy more than three or four seconds.

Instructions to Subjects

The subject was told to fixate the small pinhole light which alone was apparent when the eyepiece shutter was raised and to hold this fixation with as little eye movement as possible during the judgment. In case he felt that his eye had moved an unusual amount he was asked to report that fact. This included any possible case in which his eye had been allowed to wander to one or both of the object lights. He was asked to try and keep, as far as possible, his judgments of size and luminosity separate and not make judgments favoring one light in both attributes because he felt sure that one was brighter or larger. The instructions as to the character of his judgements, *i.e.* the factors of saturation, irradiation, associative phenomena, secondary phenomena, etc., were the same as in the first set with this apparatus. He was also asked to report on any unusual eye strain incident to this use of indirect vision. As this form of judgment was, for most subjects, more fatiguing than were those made with direct vision, an additional interval was allowed after each four exposures. This necessarily cut down the number of exposures possible in a 50 minute sitting.

Sixth Set of Experiments

In the first half of this series the iris diaphragm was set with its diameter equal to the opening of the standard light. The subject then alternately moved the variable light-car back from the position of maximum luminosity to a position in which he judged this light equal to the standard light, and brought it forward from minimum luminosity to equality. The judgments in this half of the series were, thus, made on luminosity alone. In the second half they were, similarly, made on size only, the brightness remaining equal. The procedure was the same as in the second set with this apparatus, except that here only one factor was manipulated and judged at a time.

No additional instructions were given except that the subject was warned of the variation in procedure of this series as com-

pared with the second set with this appartus, in which, also, the judgments had been made by means of the control wheel and lever.

Subjects

With the second form of apparatus the subjects were Dr. M. R. Fernald, Dr. M. H. S. Hayes, Dr. A. H. Sutherland, Dr. H. H. Adams and Dr. H. A. Peterson. All were graduate students in the Psychological Laboratory of the University of Chicago. All had served as subjects in laboratory experiments and were competent observers and introspectors. S. had, some months previously, received an injury to the cornea of the right eye and, on finding that his average error was several times that of any other subject, his results were thrown out and do not appear in the tables. Of the remaining four subjects only one, A, wore glasses. Subject A was astigmatic in both eyes but considerably more so in the left than in the right. He was also somewhat hypermetrophic in the right eye but not in the left. He reported a tendency to fixate distant objects (over 7 ft.) with the right eye and near objects with the left. This astigmatism and hypermetropia were adequately corrected by glasses and no visual difficulty in ordinary work was reported. He did not report the experiments as noticeably fatiguing.

The results of the different subjects cannot be regarded as absolutely comparable as H. and F. had served throughout the previous series while P. and A. were new to the experiment. The radical difference between the first apparatus and the second, from the subject's standpoint as well from that of the operator, tended to minimize the importance of this difference, *i.e.* practice with the first form of apparatus would be of only slight value in making judgments with the second form.

In all of the series with this apparatus, both those in which the subject simply made a judgment on two constant lights and those in which one light was controlled by the wheel and lever mechanism, P.'s judgments were given much more slowly than those of the three other subjects and were given with less ap-

parent certainty. His introspections were, also, less complete than those of F. and H. The judgments of F. and H. were very much as in the series with the first apparatus, except that in the judgments made by controlling one light they were necessarily much slower. In this latter form F.'s judgments were particularly painstaking and consequently slow. The introspection of both F. and H. was full throughout. A.'s judgments were given with considerably greater rapidity than those of the other three subjects, though he did not show any noticeably greater certainty than did the other subjects. His introspective reports were less complete than those of F. and H. The difficulty in being certain that the judgments on intensity were founded solely on differences in luminosity and not, in part, on differences in saturation was reported by all the subjects. P. had decided difficulty with the indirect vision series and felt rather unsatisfied with most of his results. The wheel and lever control offered some difficulty to most of the subjects during the earlier series and, to overcome this, three practice series were made with each subject, the results of which were not used. A. and P. were especially apt, both with the light-car and the iris diaphragm, to run over the point where, in their final judgment, they regarded the lights as equal and were forced to start the judgment again from the beginning. A. was the most suggestible and F. the least. In no case is there any indication that F. ever reacted to the "probability" that one light was larger or brighter. A. undoubtedly did react in this way on some occasions and H. and P. apparently did in a few cases. All of the subjects were carried through a uniform series of equal length and no variations were introduced effecting one subject only. No difference in the acuity or range of vision of the two eyes not corrected by glasses was reported by any of the subjects and there was no case of astigmatism affecting different meridians in the two eyes. As with the first apparatus a series of results was taken with the writer as subject and for the same reason.

Results

The results with this form of apparatus were on the whole negative. Those for the first set of experiments in which the distance between the lights was 1 m. or ½ m., were wholly negative. In the judgments on lights 30 cm. apart the phenomenon appeared very slightly for two subjects (F. and P.), no preference was shown by one subject (H.), and the fourth subject (A.) showed a small amount of preference for the left light in the horizontal position but none for the lower light in the vertical position. The totals on all four subjects together failed entirely to show the phenomenon, the slight preference for the lower light shown by F. and P. being offset by A.'s preference for the left-hand light.

TABLE I

		Horizontal			Vertical		
		Lf	=	Rt	U	=	L
F	B	5	11	8	8	6	10
	S	7	10	7	7	8	9
H	B	7	9	8	6	12	6
	S	8	8	8	9	7	8
P	B	7	10	7	7	7	10
	S	6	9	9	9	4	11
A	B	11	6	7	9	9	6
	S	8	9	7	8	8	8
Total	B	30	36	30	30	34	32
	S	29	36	31	33	27	36

Second Apparatus, First Series
Position of Light-Cars =60cm.
Size of Light Apertures = 13mm.
Distance between Lights = 30cm.

The judgments were made on two equal lights, both light-cars being placed 60 cm. back of the apertures. The apertures were each 13 mm. in diameter. The first column at the left gives the four subjects. The next column distinguishes between size and

brightness judgments, arranged alternately. The third column gives the number of judgments in which the right and left lights were thought to be brighter or larger and the number of times they were judged equal (=). The fourth column gives the same facts for the judgments in which the lights were set vertically.

In the second set of experiments, where the subject made judgments on brightness and size by altering the position of the variable light-car and the opening in the iris diaphragm, the phenomenon wholly failed to appear in all three divergences, *i.e.* 1 m., 50 cm. and 30 cm. Neither the individual results of the different subjects nor the total results for all subjects showed any consistent tendency to place the variable light-car farther back on the tracks in the 90° position than in the others nor to place it farther forward in the 270° position, *i.e.* to underestimate the luminosity of the upper light nor to overestimate that of the lower. The same held true for the judgments of size. The average error was somewhat less in the vertical position than in the horizontal but it is impossible to interpret this positively with reference to the appearance of the phenomenon.

Discussion of Table I

In these results the phenomenon appears in only the most reduced form. The totals for all subjects show them to a very slight extent but not clearly enough to make this table of unequivocal value in demonstrating the phenomenon. In the results of the individual subjects they appeared unambiguously only once (with subject P.), and in very much reduced form even here. The slight preference for the lower light shown by subject F. was paralleled by a greater performance for the right hand light in the brightness judgments. Subject H. showed practically no tendency to favor any of the lights consistently, while subject A. gave more frequent judgments favoring the upper and left-hand lights. The results in this table, taken by themselves, are practically negative in regard to the appearance of the phenomenon in question.

TABLE II

		Intensity +		Intensity —		Intensity Average	
0 position	A.	60.46		60.93		60.69	
	H.	56.07		56.65		56.36	
	F.	63.06	av. er.	56.58	av. er.	59.82	av. er.
	P.	61.16	2.19	60.17	.58	60.66	1.38
	Av.	60.19		58.58		59.38	
90 position	A.	57.81		56.33		57.07	
	H.	56.37		57.40		56.88	
	F.	59.84	av. er.	56.17	av. er.	58.00	av. er.
	P.	58.53	.14	57.54	1.04	58.03	1.00
	Av.	58.14		56.96		57.50	
180 position	A.	56.54		54.74		55.64	
	H.	57.58		56.73		57.15	
	F.	59.14	av. er.	54.67	av. er.	56.90	av. er.
	P.	57.37	.34	53.83	3.01	55.60	1.68
	Av.	57.66		54.99		56.32	
270 position	A.	57.68		55.67		56.67	
	H.	56.76		57.67		57.21	
	F.	57.78	av. er.	56.62	av. er.	57.20	av. er.
	P.	58.00	.44	57.00	1.26	57.50	.85
	Av.	57.56		56.74		57.15	

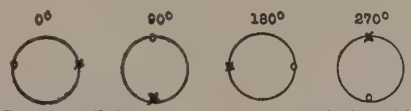

o = Standard light x = Adjustable light

		Size +		Size —		Size Average	
0 position	A.	13.06		13.54		13.30	
	H.	13.63		13.35		13.49	
	F.	12.70	av. er.	13.24	av. er.	12.97	av. er.
	P.	13.40	.20	13.88	.50	13.64	.35
	Av.	13.20		13.50		13.35	
90 position	A.	13.50		13.43		13.46	
	H.	13.28		12.88		13.08	
	F.	13.08	av. er.	13.43	av. er.	13.25	av. er.
	P.	13.45	.33	13.67	.35	13.56	.34
	Av.	13.33		13.35		13.34	
180 position	A.	13.30		13.41		13.35	
	H.	13.63		12.23		13.43	
	F.	12.85	av. er.	13.38	av. er.	13.11	av. er.
	P.	13.30	.27	13.52	.14	13.41	.33
	Av.	13.27		13.14		13.33	
270 position	A.	13.00		13.36		13.18	
	H.	14.10		13.42		13.76	
	F.	12.94	av. er.	13.30	av. er.	13.12	av. er.
	P.	13.53	.39	13.80	.47	13.66	.43
	Av.	13.39		13.47		13.43	

SECOND APPARATUS, SECOND SERIES

Position of Standard Light-Car = 58cm.
Size of Standard Aperture = 13mm.
Distance between Lights = 30cm.

Explanation and Discussion of Table II.

The table is entirely one of averages. The figures opposite the initials of the four subjects (in the left-hand margin) are averages of twenty judgments made by the subject. The four positions of the lights (left-hand margin) are given in the diagram. The column headed plus gives the positions of the variable light in which this was judged equal to the standard light after having been decreased from maximum luminosity by being moved backward from the position at the front of the track. That headed minus represents the judgments made by moving the light-car forward from the position at the rear of the track. The third column is made up of the averages between the + and — judgments of each subject and the figures given here are accepted as the actual equality judgment of the subject. The averages given for the three columns in each of the four positions are the averages of the four subjects. The average error is, in each case, the average error of the four subjects taken together. The same description applies to the results of size judgments. The + judgments were those in which the iris diaphragm in front of the variable light was set at its maximum opening and reduced by the subject to a size judged equal to the size of the standard light. The phenomenon in question would be considered to have appeared in these results if in the 90° position, the light-car of the variable light were consistently placed farther back than the standard light-car and farther forward in the 270° position. Comparing simply these two positions this holds true to a slight extent (57.50 cm. in the 90° position and 57.15 cm. in the 270° position) for the averages of all subjects and for the individual results of three of the subjects (A., F. and P.). The tendency to overestimate the right-hand light was, however, much stronger than the similar tendency in regard to the lower light, both for the averages of all subjects (59.38 cm. in the 0° and 56.32 cm. in the 180° position) and for the individual results of three subjects (A., F. and P.). Moreover the average error was less in the vertical

than in the horizontal position, *i.e.* the judgements were more accurate evaluations of the actual objective luminosity of the two lights in the vertical than in the horizontal position.

In the size judgments the averages of all subjects show an almost identical judgment in the 0°, 90° and 180° positions with a relative underestimation of size in the 270° position, *i.e.* the adjustable (upper in this case) light was made relatively larger than in the other positions in order to bring it to apparent equality with the size of the standard light. This is, of course, the phenomenon in question appearing in the size judgments. It appears for only two subjects, however (H. and P.) and to a very slight extent, *i.e.* the tendency to overestimate the standard light in the right position (180°) is approximately equal to the tendency to overestimate it when in the left (90°) position, whereas the tendency to overestimate this standard light is slightly greater when this is the lower light than when it is the upper one. (.43 mm. as against .34 mm.)

In the third set of experiments the results were again negative in regard to the phenomenon in question. Neither the range of positions in which the variable light was judged equal to the standard light in the horizontal and vertical positions, nor the relation of this range of positions of the variable light to the front of the track, *i.e.* the place at which this light reached its greatest luminosity for the subject, showed any evidence of the phenomenon in question. This range of positions of the adjustable light varied considerably for the different subjects and gave some indication of the effect of practice on the accuracy of these judgments. It averaged 1 cm. for subject F., 1.22 cm. for subject H. These two subjects had served in the previous set of experiments. For subjects P. and A. the average was 5.4 cm. and 2.69 cm. respectively.

The results in the fourth set of experiments were identical in general type with those of the second set. The substitution of the left for the right eye in making the observations had no appreciable effect in bringing out the phenomenon or in altering the general character of the results. The one exception to this

general statement was that the average error was slightly larger with the left eye than with the right—as might, perhaps, have been expected since the right eye had been used in all the other experiments with this apparatus.

The results of the experiments made with indirect vision (5th set), both in the series with a central fixation point and in that with outside fixation points, failed entirely to bring out the phenomenon. The size judgments were either reported as impossible throughout the series or were uniformly reported as equal. These two types of report apparently stood for the same sort of judgment, as indicated in the introspective accounts of the different subjects. The judgments of brightness were somewhat more erratic than was the case in the experiments with direct vision, one of the lights frequently being strongly favored, but the judgments failed to show any consistent preference for one light in either the horizontal or vertical position. This was more noticeable when the fixation point was between the lights than when it was at the side and was correlated with a greater tendency of the eye to wander from its fixation in these central fixation judgments. In spite of the occasional and relatively strong preferences for one of the two lights, the judgments in this entire set of experiments were much more predominantly judgments of equality than in the series with direct vision and were, on the whole, much more accurate evaluations of the actual objective brightness of the two lights.

The only fact that appeared in connection with the sixth set of experiments, in which the judgments on size and brightness were made separately (the lights remaining equal in one factor while the other was altered by the subject) was that the evaluations of the lights in both brightness and size were more accurate than in the earlier series where both factors were judged at once. This would naturally be expected, in the nature of the case, as the two factors had shown a mutually compensatory effect in the previous judgments. The particular phenomenon in question was quite as completely absent in this as in the previous experiments.

The judgments with this second form of apparatus were, of course, extra foveal in all cases, *i.e.* the distance between the two object lights was always such that both could not be simultaneously fixated in foveal vision. This fact forms one of the main reasons for regarding these particular phenomenon as confined exclusively to foveal vision. This will be discussed in detail at a later point.

FIGURE 5

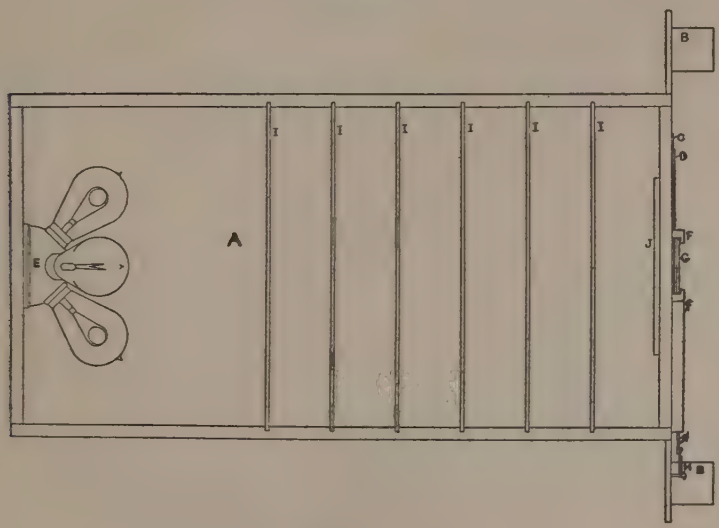

THIRD APPARATUS

A—Main light box
BB—Right and left pinhole light-boxes
C—Brass disk
D—Brass slot for aperture slides
E—4-lamp rosette
FF—Slots for exposure shutters
G—Vertical exposure shutter
G′—Horizontal exposure shutter
H—Coiled spring for horizontal exposure shutter
III—Ground glass diffusion screens
J—Slot for colored gelatine strips
The upper and lower pinhole light-boxes are not shown.

FIGURE 6

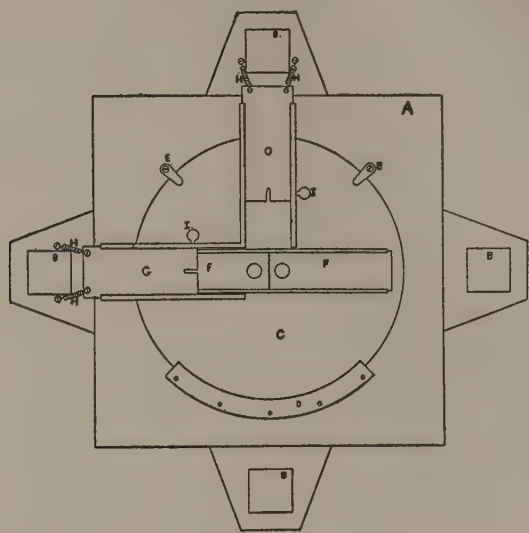

THIRD APPARATUS

A—Main light-box
BBBB—Pinhole light-boxes for eccentric fixation.
C—Brass disk
D—Brass slot in which C revolves
EE—Lugs for holding disk tight against front of light-box
FF—Brass aperture slides
GG—Horizontal and vertical exposure shutters
HHHH—Coiled wire springs for moving shutters GG
II—Release buttons for shutters GG

THIRD FORM OF APPARATUS

Description

In this form two objective light surfaces were shown, as in the second type of apparatus. The source of light, however, was unitary and the openings alone were rotated. The apparatus consisted of a light-tight, rectangular, wooden box, 92 cm. long and 48 cm. square. At the center of the rear wall of the box was mounted a "four-way" electric light rosette supplied with four 32 candlepower lamps. This was so placed that one lamp each pointed directly upwards, downwards, right and left. They were also so adjusted that the filaments were identially placed with reference to the front of the box. A circular opening, 35 cm. in diameter, was cut in the front wall of the box, concentric with this wall. In front of this, and fitting tightly against the box was a brass disk, 37 cm. in diameter. This was held in place, concentric with the opening by a metal groove, running around the lower third of the disk, into which it fitted. A strip of black velvet, running around the edge of the opening, on the front of the box, made a light-tight joint. The disk could be rotated without removal from the groove or it could be removed from the groove by turning a pair of wing screws at the top. A slot 29 cm. long and 8 cm. wide was cut concentric with the disk. On both faces of the disk, 1 cm. from the edges of the slot and paralleling the same, metal grooves were soldered. Brass slides, 10 cm. wide and of varying lengths, were made to run in the grooves on the front of the disk. These slides each contained one circular opening, varying in size from 1 to 4 cm. diameter. The openings were cut so that the edge came 1 mm. from the end of the slide. Two of these slides could be used with the aperture ends turned toward the center of the disk. By using solid slides of different lengths between them and overlapping these 1 mm. on to each of the aperture slides, any required dis-

tance between the inner edges of the two lights could be obtained from 1 mm. to 25 cm. Two openings differing in diameter by .5 mm. or more were used to produce unequal pairs of lights. Inequality in intensity was produced by the use of diffusion screens which slid into the grooves on the back of the disk. When unequal intensities were desired, unequal numbers of these screens were put behind the two individual openings. The inside of the light box also contained grooves for large ground glass diffusion screens, six of which were used at different distances from the light cluster. The inside of the box was given four coats of white enamel paint. The sides and back thus served as reflectors. The surface of the back wall was uniform throughout and the sides were identical in area and character of reflecting surface. The four lamps were connected in parallel with a 220-volt, 15-ampere circuit from the University power house which was very constant after 5 P. M. New lamps were substituted after the old ones had burned for one fourth of their estimated kilowatt-hour life. In one of the control series with this apparatus four small light-boxes, similar to those used in the second apparatus, were used for eccentric fixation. These were placed directly above, below, to right and left of the center of the disk and 30 cm. distant. Wooden slides, running in grooves, were also added to the front of the box for use in the judgments with indirect vision. One of these projected over the disk from the left side, the other from above. They both extended 4 cm. beyond the center of the disk. By releasing a catch either one could be shot back, exposing the center of the disk, in something under one tenth of a second. In the center of part of the solid brass slides, used to separate the aperture slides, a small pinhole was drilled through which the light from behind appeared. A slot about 2 mm. wide was cut in the inner end of each of the wooden slides so as to allow this small spot light to be seen both while the screen was set, covering the two large lights, and while it was being shot back to expose these. The horizontal slide was used to expose the lights in the vertical positions and the vertical slide the lights in the horizontal positions. By this

method a permanent fixation was given and the lights were exposed almost instantaneously and wholly simultaneously. The position and arrangement of the subject's chair was the same as in the second form of apparatus except for the absence of the control wheel and lever.

Procedure

First Set of Experiments (Main Set)

In the main set of experiments with this apparatus the procedure, as far as concerned the subject, was identical with that in the first set with the second apparatus (see page 17). Simple judgments of equality or inequality in size and luminosity were made between two lights which were exposed simultaneously and which remained constant during the judgment. The subject exercised no control over either one of them. The differences in procedure (affecting the operator) were merely such as were incident to the new method of changing the position, relative size and intensity, separation, etc. of the lights in this form of apparatus. The instructions to the subject were also identical with those given in the first set with the second apparatus. The interval between judgments was shorter than in any of the series with the second form of apparatus, due to the greater ease with which the positions of the lights could be changed in this apparatus. The time averaged 30 seconds between judgments with an additional period of 3 minutes between series of eight judgments. The length of the sittings averaged between 40 and 45 minutes and 30 exposures were given. Three sizes of aperture were used for the main set of results. These were 1 cm., 2 cm. and 4 cm. in diameter. Two of these were larger and one smaller than the standard aperture used for the main set of experiments with the second apparatus. (13 mm.) Four colors were used. (Yellow, red, green, white.) Twice as many judgments were taken with the yellow as with any of the other colors as the yellow lights seemed to approximate most nearly to the conditions of the astronomical phenomena in question. Varying numbers of screens were used with the different colors to equate

them in brightness. The lights, with all four colors, were equated in brightness with the standard light of the second apparatus placed at 60 cm. (the position of the standard light used for the main set of experiments with that apparatus). The difficulty in obtaining a blue of equal saturation and brightness with the other colors prevented the use of this color. The lights were shown in five different divergences. These were 0 and 13 cm., forming the two extremes, and three divergences equal respectively to ½ the diameter of the aperture used, to the diameter of the aperture and to twice the diameter of the aperture. The largest of these divergences was smaller than the smallest divergence possible with the second form of apparatus.

Sets of Control Experiments

These were made for the purpose of bringing out the effect of certain modifications of the method employed in the main set of experiments with this apparatus, *i.e.* indirect vision, binocular vision, oblique positions of the object lights instead of the vertical-horizontal arrangement, etc.

Throughout the control series only three colors were used instead of four as in the main set of experiments with this apparatus. The results for the white light so closely approximated those for the yellow that the white was omitted for this series. The 2 cm. aperture alone was used. This had uniformly shown the phenomenon in question so much more clearly than the 1 and 4 cm. apertures that it was decided that the results of the control series would appear more clearly with this than with the other openings.

Second Set of Experiments (Control I)

In this series the procedure, for both subject and operator, was identical with that in the main series with this apparatus except that the lights were shown in oblique positions instead of in the horizontal and vertical as in all previous series. This necessitated a slightly different form for reporting judgments and these were given as upper-right, upper-left, lower-right and lower-left.

Third Set of Experiments (Control II)

Here the one variation on the main series was that the judgments were made in binocular instead of monocular vision. Otherwise the procedure for subject and operator alike was identical with the main series with this apparatus.

Fourth Set of Experiments (Control III)

This was also identical with the main series except for one variation. In this case the difference was in the eye used—here the left eye, instead of the right as in the previous experiments with this apparatus, was used.

Fifth Set of Experiments (Control IV)

In this set the permanent central fixation point was used. The procedure was as follows. The subject's shutter was dropped; the lamp cluster in the light box was switched on; the disk, with the aperture slides adjusted, was put in the desired position; one of the exposure shutters was drawn over the disk and set; (see description of apparatus, page 36) the subject's eye-piece shutter was raised and he fixated the pinhole light visible through the small slot in the end of the exposure shutter: the ready signal was given, the catch of the exposure shutter released and the lights exposed. After making his judgment the subject's shutter was dropped, the lights shifted to another position and the process repeated. Aside from this introduction of a central fixation point which was visible before the lights were shown, this series was like the main set with this apparatus.

Instructions to Subjects

The subjects were instructed to hold the fixation of the small light steadily both before and during the exposure of the two object lights and he was asked to report any failure to carry out this instruction.

The object of this control series was to determine whether primacy, in the fixation of one light, bore any definite relation to the tendency to overestimate this light. Without the central spot

for fixation before the object lights were exposed it was impossible to determine with any accuracy, which of the two object lights was first focused.

Sixth Set of Experiments (Control V)

The object of this control was to determine the extent to which the phenomenon in question, which had appeared strikingly in the main series with direct vision, might occur with indirect vision.

In this series the subject's procedure and the instructions to the subject were identical with those in the series of indirect-vision judgments with the second apparatus (with fixation lights 60 cm. from the central axis). (See Procedure, page 23.) There was in this series, however, no central fixation point placed directly between the lights. This was omitted because, owing to the relatively small distance between the lights, fixation of a spot light placed between them did not bring them into genuine indirect vision. The only variation in the operator's procedure with this apparatus was such as inhered in the differences between this form and the second apparatus, *i.e.* the manner of changing the position, separation and relative size and intensity of the two lights, method of exposing the lights by a single shutter sliding over both lights instead of the double shutter of the second form, etc.

Seventh Set of Experiments (Control VI)

In this series the procedure was identical, for both subject and operator, with that of the main series. The one difference was in the amount of separation of the two lights. The object was to determine approximately the amount of separation of the lights at which the phenomena under examination ceased to be unquestionably present. The different distances used between the lights were 8, 12, 18 and 24 cm. making the divergence respectively 4, 6, 9 and 12 times the diameter of the light.

Eighth Set of Experiments (Control VII)

The object of this series was to secure some objective evaluation for the overestimation of the lower of two vertical lights which, in the horizontal position, were regarded as equal, as well as some objective measure of the amount of difference in luminosity which would be overlooked in the horizontal and in the vertical position. The procedure of the subject was the same as in the main series with this apparatus. The only difference in the operator's procedure was in the use of unequal numbers of screens behind the two apertures.

Subjects

In the experiments with the third form of apparatus four subjects were again used. Dr. M. H. S. Hayes, Dr. M. R. Fernald, Dr. E. M. Chamberlain and Mr. F. A. C. Perrin (F.P.). All were graduate students in the Psychological Laboratory and all were competent observers and introspectors. Unfortunately it was not possible to have the same group of subjects throughout the experiments with the three forms of apparatus. H. and F. served throughout the entire series, C. acted as subject with the first and with the third form of apparatus, while F. P. served only for the third series. Subject F. P. did not wear glasses and reported completely normal vision. No difference in the visual acuity of the two eyes was known to exist or discovered in reading tests.

The large amount of practice which H. and F. had had in the two previous series makes their results not wholly comparable with those of the other two subjects, and especially with those of F. P. All of the subjects had difficulty with those indirect vision judgments in which the two object lights were very close together; especially those in which the lights were 1 cm. apart. In these cases judgments on size were generally reported as impossible. A third form of judgment, in addition to those on size and luminosity, which was most persistent with F. P., was frequently added during the work with this form of apparatus. The lights appeared as differently placed in the third dimension.

The larger and brighter light was generally regarded as the nearer, but this relation was by no means constant and even a light which was judged to be both smaller and dimmer was occasionally thought to be nearer.

Results

First Set of Experiments (Main Set)

In these experiments with the third form of apparatus the phenomenon appear very strikingly and consistently throughout the results of each of the four subjects as well as throughout the total results of all subjects taken together. It appears clearly in each of the five divergences taken separately, and strikingly in all but the two extreme divergences (O and 13 cm.). It appears very noticeably in each of the four colors considered separately and with each of the three apertures used. While individual judgments not infrequently favor the right or left light as well as the lower, or actually favor the upper instead of the lower; and while the judgments on one color or aperture with a particular divergence occasionally fail to show the phenomena, show the reverse preference for the upper light, or show an equal or greater preference for one of the lights in the horizontal position, yet this is never true in the totals for any aperture, color or divergence.

No one of the subjects has, of course, shown an exact equality of judgments favoring the right and left lights in the horizontal position, but the difference in these judgments for subjects F. and H. is so slight as to be practically negligible and when taken in connection with the very large number of positive judgments of equality given for this position, the relatively small number of such judgments in the vertical position, and the great preponderance of judgments favoring the lower light, it shows the phenomenon in a very striking manner with these two subjects. The phenomena are less apparent with the other two subjects, with whom the preference for the lower light is paralleled by a distinct preference for the left-hand light. This latter preference never, however, equals or closely approximates

the former in any of the sets of totals except in the 13 cm. divergence totals. The effect of practice in bringing out the phenomenon is at least indirectly shown in the results of the four subjects. The two subjects with whom it appears most clearly and most consistently, H. and F., are the ones who have acted as subjects for all the previous series with the different forms of apparatus, while the subject with whom it appears least clearly, P, has acted in none of the previous experiments. The possibility of suggestion in this is obviated by the fact that all of the subjects have been kept in ignorance of everything save the general nature of the problem. None of them has been aware that the lower light has been preponderantly judged brighter in other fields of work; none of them has had any knowledge as to whether the two lights shown in any particular case were objectively equal or unequal.

The judgments on brightness have consistently shown the phenomenon more strikingly than those on size. This is not to be correlated with the order of making or giving the judgments as this has varied continually with all subjects. The negative judgments (Tables 18-22) have most frequently concerned the size factor, *i.e.* a distinct difference in brightness was recorded but no decision could be made as to a difference in size, though the subject was almost equally unable to say that the two lights were certainly and undoubtedly equal in size. Moreover, these judgments have most frequently occurred where the lights were thought to be only slightly different in brightness. Where the brightness judgment was one of marked inequality, the size judgment generally showed a parallel preference. The percentage of judgments where one light was accepted as larger and the other as brighter is so small as to be almost negligible except in the case of subject P, with whom they are relatively numerous. This fact, taken together with the statement in regard to the negative judgments, the uniformly larger number of judgments of equality for size, and the less noticeable preference for the lower light in the size judgments, seems to indicate that the phenomenon in question is concerned chiefly, if not solely,

with the brightness factor and that whatever evidence of it appears in the size judgments is due to the tendency to regard the brighter light as also the larger.

The tendency of the phenomenon to appear most frequently and most clearly in the 2 cm. aperture is decidedly striking in the results of all four subjects. This fact might be interpreted as an effect of practice, as it occurs more conspicuously with subjects F. and H. than with A. and P., but this aperture is less like that used in the main set of experiments with apparatus 2 than is the 1 cm. aperture of this apparatus. The introspection of the different subjects indicates that these medium sized lights were *"more easy to judge."* Compared with the smaller lights they showed less irradiation—always a somewhat distracting factor where it appeared markedly—while in comparison with the larger lights they were more easily "focused together," with less tendency of the eye to move over the surface of each light. In the case of the larger lights it was most frequently reported that one or both lights did not appear uniformly bright over the entire surface, a factor making judgment of relative luminosity difficult. Visual associations and partial illusions were most frequently reported in judgments on the largest lights, such as "automobile head-lights," "cat's eyes," "brownies," etc. While these associative experiences sometimes strongly influenced the judgments, they also interfered with the judgments in many cases.

The tendency of the phenomenon to appear most frequently with the red and green lights seems to have been in part, at least, correlated with the greater saturation of these two colors. The remark, "it looks more saturated, so I suppose it is less bright" was quite frequently made with regard to the red and green, and particularly with reference to the former, while it was made with much less frequency in regard to the yellow and white. The preponderance of the phenomenon with the red, as against the other colors, is by no means as striking as this preponderance with the 2 cm. aperture as compared with the other apertures. The size of the opening has apparently a greater effect on the

appearance of the phenomenon than the color of the light. The red and green light were more frequently referred to as "pleasanter" than were the others, apparently in virtue of their greater saturation. This was particularly true of the red. The white was reported as having the greatest amount of irradiation and the red the least, which may have been a determining factor in the relative importance of the phenomenon with the different colors. The appearance of the phenomenon in the different colors showed less uniformity with the different subjects than did its relative importance in the different apertures and divergences; the color factor, that is, appeared to be more an individual characteristic of the different subjects and less evidently a persistent factor of the phenomenon than did the other factors of size of aperture and separation of the lights.

The relative importance of the phenomenon in the five different divergences in which the lights were shown was more uniform than in the four different colors. The 13 cm. divergence invariably showed them least clearly and the O divergence to the next smallest extent. As between the three other divergences there was less uniformity in the frequency with which the phenomenon appeared but, on the whole, the divergence equal to the light diameter showed them most clearly. The introspective accounts indicated that, as in the case of the medium sized aperture, the lights shown with this divergence were "easier to judge" and that those shown with the 0 and 13 cm. divergence were the most difficult. In the case of the O divergence the two lights tended to fuse and become difficult to distinguish clearly. Where there was a marked irradiation from the two lights in this position, this tended further to impede the judgment, in both size and brightness. In the 13 cm. divergence the lights were far enough apart so that a distinct eye movement was necessary in order to compare them. The comparison became then one between a light seen in direct vision and one seen in indirect vision. In the cases of the medium divergences it was possible to take in both lights in direct vision without, on the other hand, having them fuse together.

In the following tables of results for the main series of experiments with the 3d apparatus, two sets of totals are given *i.e.* one including the 13 cm. divergence results and one exclusive of these results. The results are given in this way because the 13 cm. divergence is really intermediate between the other divergences used with this apparatus and the smallest divergence used with the second apparatus. The phenomenon appeared much less strikingly in the 13 cm. results than in the results with the smaller divergences and it's unambiguous appearance with these smaller divergences is more clearly seen when the 13 cm. results are left out.

Third Apparatus, first series. Results with three apertures, five divergences and four colors given separately

TABLE III

INDIVIDUAL RESULTS—SUBJECT F.

Distance between lights	Judgm'nt on	Color	Diameter of lights: 1 cm. Horiz Lf	=	Rt	1 cm. Vert Up	=	Lw	2 cm. Horiz Lf	=	Rt	2 cm. Vert Up	=	Lw	4 cm. Horiz Lf	=	Rt	4 cm. Vert Up	=	Lw
0 cm.	Br.	Y	0	6	2	0	4	4	6	2	0	0	4	4	4	4	0	2	2	4
		R	0	4	0	1	0	3	2	2	0	0	0	4	0	2	2	0	2	2
		G	2	2	0	1	0	3	0	2	2	2	0	2	4	0	0	0	2	2
		W	0	1	3	1	1	2	0	3	1	1	0	3	4	0	0	0	2	2
	Size	Y	1	3	4	2	2	4	6	0	2	1	3	4	2	2	4	3	3	2
		R	0	3	1	0	2	2	1	1	2	1	1	2	2	1	1	1	2	1
		G	2	2	0	1	0	3	0	2	2	2	0	2	2	0	2	0	4	0
		W	1	0	3	1	2	1	0	2	2	0	0	4	3	0	1	0	2	2
½ diameter of light	Br.	Y	2	4	2	1	0	7	0	8	0	1	0	7	1	6	1	2	0	6
		R	2	2	0	1	0	3	1	3	0	0	0	4	1	2	1	1	0	3
		G	0	4	0	1	0	3	0	3	1	0	0	4	1	2	1	0	0	4
		W	1	3	0	1	0	3	0	2	2	1	0	3	0	3	1	0	0	4
	Size	Y	4	2	2	2	2	4	1	7	0	2	3	3	3	3	2	2	1	5
		R	1	2	1	1	0	3	1	3	0	0	0	4	1	1	2	1	2	1
		G	0	4	0	1	2	1	0	3	1	0	0	4	2	1	1	0	2	2
		W	1	3	0	1	1	2	1	1	2	0	2	2	1	3	0	1	1	2
= diameter of light	Br.	Y	2	2	4	0	2	6	1	7	0	0	0	8	1	5	2	0	1	7
		R	0	2	2	0	0	4	0	4	0	0	0	4	1	2	1	0	1	3
		G	1	3	0	0	0	4	0	4	0	0	0	4	0	4	0	0	1	3
		W	1	3	0	1	0	3	1	3	0	0	0	4	0	2	2	0	1	3
	Size	Y	2	2	4	2	2	4	1	6	1	0	3	5	1	5	2	0	3	5
		R	1	3	0	2	0	2	0	4	0	0	2	2	1	2	1	2	1	1
		G	1	3	0	0	0	4	1	3	0	0	0	4	0	0	4	0	2	2
		W	1	1	2	0	4	0	0	4	0	0	0	4	1	2	1	0	0	4
2 × diameter of light	Br.	Y	0	8	0	0	3	5	0	4	4	0	2	6	0	0	8	4	0	4
		R	0	4	0	0	2	2	0	2	2	0	0	4	0	3	1	0	0	4
		G	1	2	1	0	2	2	0	4	0	0	1	3	1	3	0	0	2	2
		W	1	2	1	0	1	3	0	4	0	0	1	3	2	2	0	1	2	1
	Size	Y	0	8	0	3	3	2	0	6	2	1	3	4	5	1	2	4	0	4
		R	0	4	0	1	1	2	2	1	1	0	0	4	0	4	0	2	2	0
		G	1	2	1	0	1	3	0	4	0	2	1	1	0	4	0	2	2	0
		W	0	0	4	2	0	2	1	3	0	1	1	2	1	3	0	2	0	2
13 cm.	Br.	Y	2	1	5	2	2	4	4	4	0	0	3	5	2	2	4	0	2	6
		R	2	1	1	0	0	4	0	4	0	0	1	3	1	2	1	2	2	0
		G	1	1	2	0	1	3	0	0	4	0	0	4	2	1	1	2	2	0
		W	2	1	1	1	1	2	0	1	3	0	0	4	3	1	0	3	1	0
	Size	Y	1	5	2	1	5	2	1	2	5	3	5	0	4	3	1	0	2	6
		R	1	1	2	0	0	4	0	4	0	0	2	2	2	0	2	1	3	0
		G	1	1	2	0	2	2	1	3	0	1	3	0	0	2	2	1	1	2
		W	2	1	1	0	4	0	0	1	3	0	0	4	1	2	1	1	3	0

TABLE IV

INDIVIDUAL RESULTS—SUBJECT H.

Distance between lights	Judgm'nt on	Color	Diameter of lights: 1 cm. Horiz Lf = Rt	1 cm. Vert Up = Lw	2 cm. Horiz Lf = Rt	2 cm. Vert Up = Lw	4 cm. Horiz Lf = Rt	4 cm. Vert Up = Lw
0 cm.	Br.	Y	2 4 2	2 2 4	2 4 2	2 0 6	2 6 0	4 0 4
		R	2 2 0	0 2 2	0 4 0	0 0 4	0 2 2	1 1 2
		G	2 2 0	0 0 4	0 2 2	0 2 2	0 4 0	0 2 2
		W	0 0 4	1 0 3	1 3 0	0 1 3	0 0 4	0 2 2
	Size	Y	3 3 2	0 2 6	2 4 2	0 2 6	2 5 1	4 0 4
		R	2 2 0	1 1 2	1 2 1	2 0 2	1 0 3	1 1 2
		G	2 2 0	0 2 2	2 0 2	0 2 2	3 1 0	0 4 0
		W	1 1 2	1 2 1	1 3 0	1 1 2	1 2 1	0 3 1
½ diameter of light	Br.	Y	3 5 0	0 2 6	0 8 0	0 1 7	3 2 3	0 0 8
		R	0 4 0	0 0 4	0 4 0	0 0 4	2 2 0	0 1 3
		G	2 0 2	0 0 4	0 4 0	0 0 4	0 4 0	0 2 2
		W	0 4 0	0 2 2	2 1 1	0 2 2	0 2 2	2 0 2
	Size	Y	3 4 1	2 2 4	2 6 0	1 0 7	5 0 3	3 0 5
		R	1 3 0	0 1 3	0 4 0	0 0 4	2 2 0	0 0 4
		G	2 0 2	0 4 0	0 3 1	0 2 2	0 4 0	1 3 0
		W	0 4 0	0 2 2	2 1 1	0 2 2	1 2 1	0 1 3
= diameter of light	Br.	Y	4 4 0	0 2 6	2 6 0	0 0 8	0 7 1	0 2 6
		R	0 3 1	0 0 4	0 4 0	0 0 4	0 2 2	0 0 4
		G	0 4 0	0 0 4	0 4 0	0 0 4	2 2 0	0 0 4
		W	0 3 1	0 0 4	0 4 0	0 0 4	1 1 2	0 2 2
	Size	Y	3 4 1	0 4 4	2 4 2	2 0 6	0 5 3	2 2 4
		R	0 4 0	0 0 4	0 4 0	0 0 4	0 2 2	0 0 4
		G	0 2 2	0 0 4	2 2 0	0 0 4	2 0 2	0 0 4
		W	0 3 1	0 2 2	0 4 0	0 0 4	0 1 3	0 2 2
2 × diameter of light	Br.	Y	0 4 4	2 4 2	2 4 2	0 4 4	4 0 4	0 4 4
		R	0 4 0	0 0 4	0 4 0	0 0 4	0 3 1	0 1 3
		G	1 3 0	0 1 3	0 4 0	0 0 4	0 2 2	2 0 2
		W	2 2 0	0 2 2	0 4 0	0 1 3	1 1 2	1 3 0
	Size	Y	0 4 4	1 4 3	1 5 2	2 4 2	2 2 4	0 6 2
		R	2 2 0	3 0 1	0 4 0	0 0 4	2 1 1	0 1 3
		G	0 4 0	0 1 3	0 4 0	0 0 4	0 3 1	1 1 2
		W	2 1 1	0 0 4	0 2 2	0 1 3	1 1 2	3 1 0
13 cm.	Br.	Y	2 0 6	3 2 3	3 2 3	2 4 2	3 3 2	2 2 4
		R	0 2 2	0 2 2	2 1 1	2 0 2	0 2 2	1 0 3
		G	2 0 2	1 2 1	2 0 2	0 0 4	3 1 0	1 2 1
		W	3 1 0	1 0 3	2 0 2	1 2 1	3 0 1	3 1 0
	Size	Y	3 0 5	4 1 3	3 2 3	2 4 2	4 4 0	2 2 4
		R	1 2 1	0 2 2	2 1 1	2 0 2	1 1 2	1 2 1
		G	2 0 2	2 2 0	2 0 2	0 0 4	0 3 1	2 2 0
		W	2 2 0	0 0 4	0 2 2	0 2 2	3 0 1	3 1 0

TABLE V

INDIVIDUAL RESULTS—SUBJECT A.

Distance between lights	Judgment on	Color	Diameter of lights: 1 cm. Horiz Lf = Rt			1 cm. Vert Up = Lw			2 cm. Horiz Lf = Rt			2 cm. Vert Up = Lw			4 cm. Horiz Lf = Rt			4 cm. Vert Up = Lw		
0 cm.	Br.	Y	4	2	2	2	0	6	5	0	3	4	0	4	4	1	3	2	0	1
		R	0	2	2	0	0	4	2	0	2	2	0	2	0	4	0	0	2	2
		G	1	0	3	0	4	0	1	3	0	0	0	4	2	0	2	0	0	4
		W	2	0	2	3	0	1	2	0	2	0	0	4	4	0	0	2	2	0
	Size	Y	5	2	1	2	2	4	4	1	3	3	0	5	4	2	2	3	0	5
		R	1	2	1	0	1	3	2	0	2	2	0	2	0	4	0	0	2	2
		G	2	0	2	0	2	2	1	2	1	0	0	4	2	1	1	0	1	3
		W	1	0	3	2	1	1	4	0	0	0	1	3	2	0	2	2	1	1
½ diameter of light	Br.	Y	2	2	4	3	0	5	2	2	4	2	0	6	7	1	0	0	0	8
		R	4	0	0	0	0	4	4	0	0	0	0	4	0	0	4	0	0	4
		G	2	1	1	0	0	4	3	0	1	0	0	4	0	2	2	0	0	4
		W	1	0	3	2	0	2	1	0	3	0	0	4	0	2	2	1	0	3
	Size	Y	2	3	3	2	0	6	2	2	4	2	0	6	6	2	0	1	2	5
		R	4	0	0	0	0	4	3	1	0	0	0	4	0	1	3	0	0	4
		G	2	0	2	0	0	4	2	1	1	1	1	2	1	1	2	0	0	4
		W	2	0	2	2	0	2	1	0	3	0	0	4	0	4	0	3	0	1
= diameter of light	Br.	Y	2	2	4	0	0	8	2	0	6	1	0	7	7	0	1	2	0	6
		R	2	0	2	0	0	4	0	2	2	0	0	4	1	0	3	0	0	4
		G	2	0	2	0	0	4	3	0	1	0	0	4	2	0	2	1	0	3
		W	4	0	0	0	0	4	4	0	0	0	0	4	1	0	3	1	0	3
	Size	Y	2	1	5	2	0	6	2	1	5	2	0	6	5	0	3	4	0	4
		R	1	0	3	0	1	3	0	1	3	0	0	4	1	1	2	0	0	4
		G	2	0	2	1	0	3	0	3	1	0	1	3	1	1	2	1	0	3
		W	4	0	0	0	2	2	2	2	0	0	0	4	1	0	3	1	0	3
2 × diameter of light	Br.	Y	5	3	0	2	0	6	4	1	3	0	1	7	1	0	7	2	1	5
		R	2	0	2	0	0	4	2	2	0	0	0	4	0	4	0	0	0	4
		G	2	0	2	0	0	4	0	2	2	0	0	4	2	2	0	1	0	3
		W	3	0	1	0	0	4	2	0	2	3	0	1	2	0	2	2	0	2
	Size	Y	3	4	1	1	0	7	4	1	3	1	0	7	2	2	4	1	2	5
		R	2	0	2	1	0	3	1	3	0	0	0	4	1	3	0	0	0	4
		G	0	2	2	0	0	4	1	1	2	1	0	3	2	2	0	0	1	3
		W	2	1	1	1	0	3	2	0	2	2	1	1	2	0	2	1	0	3
13 cm.	Br.	Y	2	2	4	4	2	2	2	4	2	0	4	4	4	2	2	3	0	5
		R	0	4	0	2	0	2	2	0	2	3	1	0	1	2	1	0	4	0
		G	0	2	2	1	3	0	2	2	0	0	2	2	0	4	0	0	4	0
		W	2	1	1	0	2	2	0	3	1	0	0	4	2	2	0	2	0	2
	Size	Y	2	2	4	4	2	2	4	2	2	2	4	2	4	2	2	3	0	5
		R	0	3	1	1	1	2	1	1	2	3	0	1	2	1	1	1	3	0
		G	1	1	2	1	3	0	2	2	0	0	2	2	0	3	1	2	2	0
		W	3	1	0	0	1	3	0	3	1	0	1	3	2	2	0	1	1	2

TABLE VI

INDIVIDUAL RESULTS—SUBJECT P.

Distance between lights	Judgm'nt on	Color	Diameter of lights: 1 cm. Horiz Lf = Rt			1 cm. Vert Up = Lw			2 cm. Horiz Lf = Rt			2 cm. Vert Up = Lw			4 cm. Horiz Lf = Rt			4 cm. Vert Up = Lw		
0 cm.	Br.	Y	4	0	4	0	4	4	4	4	0	4	0	4	0	6	2	2	2	4
		R	2	0	2	0	0	4	2	2	0	0	1	3	2	2	0	2	0	2
		G	2	0	2	0	2	2	2	0	2	2	0	2	2	2	0	0	2	2
		W	2	1	1	1	1	2	1	2	1	1	0	3	2	1	1	1	1	2
	Size	Y	4	0	4	1	4	3	4	4	0	2	0	6	0	4	4	2	2	4
		R	2	0	2	0	3	1	0	4	0	0	1	3	2	2	0	2	0	2
		G	2	0	2	0	2	2	2	1	1	2	0	2	2	1	1	1	2	1
		W	2	1	1	1	2	1	2	1	1	1	0	3	3	0	1	1	1	2
½ diameter of light	Br.	Y	3	5	0	2	2	4	2	4	2	2	2	4	2	2	4	2	2	4
		R	0	2	2	1	0	3	2	2	0	0	0	4	2	0	2	0	0	4
		G	0	4	0	0	2	2	2	2	0	0	0	4	1	2	1	0	2	2
		W	2	1	1	1	1	2	0	2	2	2	0	2	2	1	1	0	2	2
	Size	Y	5	3	0	2	4	2	2	3	3	2	2	4	2	2	4	2	3	3
		R	1	1	2	1	0	3	2	1	1	0	0	4	2	1	1	0	2	2
		G	0	3	1	1	3	0	1	2	1	0	0	4	2	2	0	0	2	2
		W	2	0	2	1	1	2	0	0	4	2	1	1	1	2	1	0	2	2
= diameter of light	Br.	Y	3	5	0	2	2	4	3	3	2	4	0	4	4	2	2	2	2	4
		R	2	0	2	2	0	2	0	4	0	0	0	4	0	4	0	0	0	4
		G	2	0	2	0	0	4	2	2	0	0	0	4	2	0	2	0	2	2
		W	1	1	2	0	1	3	0	4	0	0	1	3	2	0	2	2	0	2
	Size	Y	4	4	0	2	3	3	3	1	4	5	0	3	4	3	1	2	2	4
		R	1	1	2	2	2	0	0	2	2	0	0	4	1	3	0	0	0	4
		G	2	1	1	0	0	4	2	2	0	0	2	2	2	0	2	0	1	3
		W	0	2	2	0	0	4	2	2	0	1	0	3	2	0	2	2	1	1
2 × diameter of light	Br.	Y	4	2	2	2	2	4	0	2	6	1	0	7	4	4	0	2	0	6
		R	0	2	2	0	0	4	4	0	0	0	0	4	2	2	0	0	0	4
		G	0	2	2	1	1	2	2	2	0	2	0	2	3	0	1	0	1	3
		W	4	0	0	2	2	0	3	0	1	0	0	4	0	0	4	0	2	2
	Size	Y	2	4	2	1	2	5	2	0	6	0	0	8	6	2	0	3	0	5
		R	2	0	2	1	0	3	2	2	0	0	2	2	0	2	2	1	0	3
		G	1	2	1	0	1	3	4	0	0	2	1	1	2	0	2	0	0	4
		W	4	0	0	2	1	1	1	2	1	0	1	3	0	0	4	2	2	0
13 cm.	Br.	Y	2	4	2	4	2	2	3	4	1	2	2	4	0	6	2	2	6	0
		R	2	2	0	1	0	3	2	0	2	0	2	2	1	1	2	0	2	2
		G	2	2	0	2	0	2	0	2	2	0	1	3	0	4	0	2	0	2
		W	1	3	0	0	2	2	0	4	0	2	1	1	2	2	0	3	0	1
	Size	Y	1	4	3	4	0	4	2	5	1	2	4	2	1	5	2	3	5	0
		R	1	2	1	0	1	3	3	0	1	1	1	2	1	2	1	1	1	2
		G	1	3	0	3	0	1	1	2	1	0	1	3	1	3	0	2	0	2
		W	1	3	0	1	1	2	0	4	0	1	2	1	1	2	1	2	1	1

TABLE VII

RESULTS FOR ALL FOUR SUBJECTS TOTALED

Distance between lights Judgm'nt on	Color	Diameter of lights: 1 cm. Horiz Lf = Rt	1 cm. Vert Up = Lw	2 cm. Horiz Lf = Rt	2 cm. Vert Up = Lw	4 cm. Horiz Lf = Rt	4 cm. Vert Up = Lw
0 cm. Br.	Y	10 12 10	4 10 14	17 10 5	10 4 18	10 17 5	10 4 13
	R	4 8 4	1 2 13	6 8 2	2 1 13	2 10 4	3 5 8
	G	7 4 5	1 6 9	3 7 6	4 2 10	8 6 2	0 6 10
	W	4 2 10	6 2 8	4 8 4	2 1 13	10 1 5	3 7 6
0 cm. Size	Y	13 8 11	5 10 17	16 9 7	6 5 21	8 13 11	12 5 15
	R	5 7 4	1 7 8	4 7 5	5 2 9	5 7 4	4 5 7
	G	8 4 4	1 6 9	5 5 6	4 2 10	9 3 4	1 11 4
	W	5 2 9	5 7 4	7 6 3	2 2 12	9 2 5	3 7 6
½ diameter of light Br.	Y	10 16 6	6 4 22	4 22 6	5 3 24	13 11 8	4 2 26
	R	6 8 2	2 0 14	7 9 0	0 0 16	5 4 7	1 1 14
	G	4 9 3	1 2 13	5 9 2	0 0 16	2 10 4	0 4 12
	W	4 8 4	4 3 9	3 5 8	3 2 11	2 8 6	3 2 11
½ diameter of light Size	Y	14 12 6	8 8 16	7 18 7	7 5 20	16 7 9	8 6 18
	R	7 6 3	2 1 13	6 9 1	0 0 16	5 5 6	1 4 11
	G	4 7 5	2 9 5	3 9 4	1 3 12	5 8 3	1 7 8
	W	5 7 4	4 4 8	4 2 10	2 5 9	3 11 2	4 4 8
= diameter of light Br.	Y	11 13 8	2 6 24	8 16 8	5 0 27	12 14 6	4 5 23
	R	4 5 7	2 0 14	0 14 2	0 0 16	2 8 6	0 1 15
	G	5 7 4	0 0 16	5 10 1	0 0 16	6 6 4	1 3 12
	W	6 7 3	1 1 14	5 11 0	0 1 15	4 3 9	3 3 10
= diameter of light Size	Y	11 11 10	6 9 17	8 12 12	9 3 20	10 13 9	8 7 17
	R	3 8 5	4 3 9	0 11 5	0 2 14	3 8 5	2 1 13
	G	5 6 5	1 0 15	5 10 1	0 3 13	5 1 10	1 3 12
	W	5 6 5	0 8 8	4 12 0	1 0 15	4 3 9	3 3 10
2 × diameter of light Br.	Y	9 17 6	6 9 17	6 11 15	1 7 24	9 4 19	8 5 19
	R	2 10 4	0 2 14	6 8 2	0 0 16	2 12 2	0 1 15
	G	4 7 5	1 4 11	2 12 2	2 1 13	6 7 3	3 3 10
	W	10 4 2	2 5 9	5 8 3	3 2 11	5 3 8	4 7 5
2 × diameter of light Size	Y	5 20 7	6 9 17	7 12 13	4 7 21	15 7 10	8 8 16
	R	6 6 4	6 1 9	5 10 1	0 2 14	3 10 3	3 3 10
	G	2 10 4	0 3 13	5 9 2	5 2 9	4 9 3	3 4 9
	W	8 2 6	5 1 10	4 7 5	3 4 9	4 4 8	8 3 5
13 cm. Br.	Y	8 7 17	13 8 11	12 14 6	4 13 15	9 13 10	7 10 15
	R	4 9 3	3 2 11	6 5 5	5 4 7	3 7 6	3 8 5
	G	5 5 6	5 6 6	4 4 8	0 3 13	5 10 1	5 8 3
	W	8 6 2	2 5 9	2 8 6	3 3 10	10 5 1	11 2 3
13 cm. Size	Y	7 11 14	13 8 11	10 11 11	9 17 6	13 14 5	8 9 15
	R	3 8 5	1 4 11	6 6 4	6 3 7	6 4 6	4 9 3
	G	5 5 6	6 7 3	6 7 3	1 6 9	1 11 4	7 5 4
	W	8 7 1	1 6 9	0 10 6	1 5 10	7 6 3	7 6 3

Third Apparatus, first series. Results with all four colors together given for three apertures and five divergences.

TABLE VIII—INDIVIDUAL RESULTS—SUBJECT F.

Distance between lights	Judgment on	Diameter of lights: 1 cm. Horiz Lf = Rt	1 cm. Vert Up = Lw	2 cm. Horiz Lf = Rt	2 cm. Vert Up = Lw	4 cm. Horiz Lf = Rt	4 cm. Vert Up = Lw	Total on 1, 2 and 4 cm. lights Horiz Lf = Rt	Total Vert Up = Lw
0 cm.	Br.	2 13 5 65%=	3 5 12 60%Lw	8 9 3 45%=	3 4 13 65%Lw	12 6 2 30%=	2 8 10 50%Lw	22 28 10 47%=	8 17 35 58%Lw
	Size	4 8 8 40%=	4 6 10 50%Lw	7 5 8 25%=	4 4 12 60%Lw	9 3 8 15%=	4 11 5 25%Lw	20 16 24 27%=	12 21 27 45%Lw
½ diameter of light	Br.	5 13 2 65%=	4 0 16 80%Lw	1 16 3 80%=	2 0 18 90%Lw	3 13 4 65%=	3 0 17 85%Lw	9 42 9 70%=	9 0 51 85%Lw
	Size	6 11 3 55%=	5 5 10 50%Lw	3 14 3 70%=	2 5 13 65%Lw	7 8 5 40%=	4 6 10 50%Lw	16 33 11 55%=	11 16 33 55%Lw
= diameter of light	Br.	4 10 6 50%=	1 2 17 85%Lw	2 18 0 90%=	0 0 20 100%Lw	2 13 5 65%=	0 4 16 80%Lw	8 41 11 68%=	1 6 53 88%Lw
	Size	5 9 6 45%=	4 6 10 50%Lw	2 17 1 85%=	0 5 15 75%Lw	3 9 8 45%=	2 6 12 60%Lw	10 35 15 58%=	6 17 37 62%Lw
2 × diameter of light	Br.	2 16 2 80%=	0 8 12 60%Lw	0 14 6 70%=	0 4 16 80%Lw	3 8 9 40%=	5 4 11 55%Lw	5 38 17 63%=	5 16 39 65%Lw
	Size	1 14 5 70%=	6 5 9 45%Lw	3 14 3 70%=	4 5 11 55%Lw	6 12 2 60%=	10 4 6 30%Lw	10 40 10 67%=	20 14 26 43%Lw
13 cm.	Br.	7 4 9 20%=	3 4 13 65%Lw	4 9 7 45%=	0 4 16 80%Lw	8 6 6 30%=	7 7 6 30%Lw	19 19 22 32%=	10 15 35 58%Lw
	Size	5 8 7 40%=	1 11 8 40%Lw	2 10 8 50%=	4 10 6 30%Lw	7 7 6 35%=	3 9 8 40%Lw	14 25 21 42%=	8 30 22 37%Lw
Total	Br.	20 56 24 56%=	11 19 70 70%Lw	15 66 19 66%=	5 12 83 83%Lw	28 46 26 47%=	17 23 60 60%Lw	63 168 69 56%=	33 54 213 71%Lw
	Size	21 50 29 50%=	20 33 47 47%Lw	17 60 23 60%=	14 29 57 57%Lw	32 39 29 39%=	23 36 41 41%Lw	70 149 81 50%=	57 98 145 48%Lw
Total without 13 cm. position	Br.	13 52 15 65%=	8 15 57 71%Lw	11 57 12 71%=	5 8 67 84%Lw	20 40 20 50%=	10 16 54 68%Lw	44 149 47 62%=	23 39 178 74%Lw
	Size	16 42 22 53%=	19 22 39 49%Lw	15 50 15 63%=	10 19 51 64%Lw	25 32 23 40%=	20 27 33 41%Lw	56 124 60 52%=	49 68 123 51%Lw

Discussion of Table VIII

In the above table the characteristic phenomenon appears as follows:

A—Comparison of the three sizes of apertures. It appears most clearly, in both size and brightness judgments, with the medium size (2 cm.) and is least noticeable with the 4 cm. aperture. This is true both for the totals including the 13 cm. divergence results and for the totals without these results but it is somewhat more apparent in the latter case.

B—Comparison of the five divergences. It appears most clearly, both in size and brightness judgments, where the divergence was either ½ the diameter of one light or was equal to the diameter. It was least evident in the extremes, *i.e.* where the divergence was 13 cm. and where it was 0. The judgments where the divergence was twice the light diameter showed the phenomenon considerably less clearly than where it was equal to or ½ the light diameter but they were more nearly in a class with these than with those judgments where the divergence was at either of the extremes.

C—Comparison of size with brightness judgments. The phenomenon appeared more clearly in the latter throughout. In the fifteen separate sets given above (three apertures, each in five different divergences) the phenomenon failed to appear once in brightness judgments (4 cm.-13 cm.), twice in size judgments (4 cm.-0 cm., 2 cm.-13 cm.). It appeared very slightly in three sets of size judgments (1 cm.-0 cm., 1 cm.-2 x., 4 cm-13 cm.) and the reverse case, *i.e.* preference for the upper light, appeared in one set (4 cm.-2 x.). In two sets of brightness judgments the preference for the lower light was paralleled by an equal or greater preference for one of the lights in the horizontal judgments (4 cm.-0 cm., 4 cm.- 2 x.). In these fifteen sets the phenomenon appeared more clearly in the size judgments than in the brightness judgments but once (4 cm.-13 cm.), was about equally noticeable in the two types of judgment three times (2 cm.-2 x., 4 cm.-0 cm., 2 cm.-0 cm.), and was more apparent in the brightness judgments eleven times.

TABLE IX—INDIVIDUAL RESULTS—SUBJECT H.

Distance between lights	Judgment on	Diameter of lights: 1 cm. Horiz Lf = Rt	1 cm. Vert Up = Lw	2 cm. Horiz Lf = Rt	2 cm. Vert Up = Lw	4 cm. Horiz Lf = Rt	4 cm. Vert Up = Lw	Total on 1, 2 and 4 cm. lights Horiz Lf = Rt	Total on 1, 2 and 4 cm. lights Vert Up = Lw
0 cm.	Size	6 8 6 40%=	3 4 13 65%Lw	3 13 4 65%=	2 3 15 75%Lw	2 12 6 60%=	5 5 10 50%Lw	11 33 16 55%=	10 12 38 63%Lw
	Br.	8 8 4 40%=	2 7 11 55%Lw	6 9 5 45%=	3 5 12 60%Lw	7 8 5 40%=	5 8 7 35%Lw	21 25 14 42%=	10 20 30 50%Lw
½ diameter of light	Size	5 13 2 65%=	0 4 16 80%Lw	2 17 1 85%=	0 3 17 85%Lw	5 10 5 50%=	2 3 15 75%Lw	12 40 8 67%=	2 10 48 80%Lw
	Br.	6 11 3 55%=	2 9 9 45%Lw	4 14 2 70%=	1 4 15 75%Lw	8 8 4 40%=	4 4 12 60%Lw	18 33 9 55%=	7 17 36 60%Lw
= diameter of light	Size	4 14 2 70%=	0 2 18 90%Lw	2 18 0 90%=	0 0 20 100%Lw	3 12 5 60%=	0 4 16 80%Lw	9 44 7 73%=	0 6 54 90%Lw
	Br.	3 13 4 65%=	0 6 14 70%Lw	4 14 2 70%=	2 0 18 90%Lw	2 8 10 40%=	2 4 14 70%Lw	9 35 16 58%=	4 10 46 77%Lw
2 × diameter of light	Size	3 13 4 65%=	2 7 11 55%Lw	2 16 2 80%=	0 5 15 75%Lw	5 6 9 30%=	3 8 9 45%Lw	10 35 15 58%=	5 20 35 58%Lw
	Br.	4 11 5 55%=	4 5 11 55%Lw	1 15 4 75%=	2 5 13 65%Lw	5 7 8 35%=	4 9 7 35%Lw	10 33 17 55%=	10 19 31 52%Lw
13 cm.	Size	7 3 10 15%=	5 6 9 45%Lw	9 3 8 15%=	5 6 9 45%Lw	9 6 5 30%=	7 5 8 40%Lw	25 12 23 20%=	17 17 26 43%Lw
	Br.	8 4 8 20%=	6 5 9 45%Lw	7 5 8 25%=	4 6 10 50%Lw	8 8 4 40%=	8 7 5 25%Lw	23 17 20 28%=	18 18 24 40%Lw
Total	Size	25 51 24 51%=	10 23 67 67%Lw	18 67 15 67%=	7 17 76 76%Lw	24 46 30 46%=	17 25 58 58%Lw	67 164 69 55%=	34 65 201 67%Lw
	Br.	29 47 24 47%=	14 32 54 54%Lw	22 57 21 57%=	12 20 68 68%Lw	30 39 31 39%=	23 32 45 45%Lw	81 143 76 48%=	49 84 167 56%Lw
Total without 13 cm. position	Size	18 48 14 60%=	5 17 58 73%Lw	9 64 7 80%=	2 11 67 84%Lw	15 40 25 50%=	10 20 50 63%Lw	42 152 46 63%=	17 48 175 73%Lw
	Br.	21 43 16 54%=	8 27 45 56%Lw	15 52 13 64%=	8 14 58 73%Lw	22 31 27 39%=	15 25 40 50%Lw	58 126 56 53%=	31 66 143 60%Lw

Discussion of Table IX

In the above table the characteristic phenomenon appears as follows:

A—Comparison of the three sizes of apertures. It appears most clearly, both in size and brightness judgments, with the medium size (2 cm.) and is least noticeable in the 1 cm. aperture. This is true both for the totals including the 13 cm. divergence results and for the totals without these results but it is decidedly more apparent in the latter case.

B—Comparison of the five divergences. The phenomenon appears most clearly, both in size and brightness, where the divergence was equal to the diameter of one light and decreasingly in the other divergences in the following order: ½ the light diameter, 2 x. the light diameter, 0 divergence, 13 cm.

C—Comparison of size with brightness judgments. The phenomenon appeared more clearly in the latter throughout. In the fifteen sets given above (three apertures, each in five different divergences), the phenomenon appeared in every set of brightness judgments, failed to appear in one set of size judgments (4 cm.-13 cm.). It appeared only slightly in one set of size judgments (4 cm.-0 cm.) and in one set of brightness judgments (4 cm.-13 cm.). The reverse case, i.e. preference for the upper light, appeared in one set of size judgments (4 cm-13 cm.). In one set of brightness judgments (4 cm.-13 cm.) and in one set of size judgments (4 cm.-0 cm.) the preference for the lower light was paralleled by an equal or greater preference for one of the lights in the horizontal position. In these fifteen sets the phenomenon appeared more clearly in the size judgments than in the brightness judgments but once (2 cm.-13 cm.), was about equally noticeable in the two types of judgment twice (1 cm.-0 cm., 1 cm.-13 cm.), and was more apparent in the brightness judgments twelve times.

TABLE X—Individual Results—Subject A.

Distance between lights	Judgment on		Diameter of lights: 1 cm. Horiz Lf = Rt	1 cm. Vert Up = Lw	2 cm. Horiz Lf = Rt	2 cm. Vert Up = Lw	4 cm. Horiz Lf = Rt	4 cm. Vert Up = Lw	Total on 1, 2 and 4 cm. lights Horiz Lf = Rt	Total on 1, 2 and 4 cm. lights Vert Up = Lw
½ diameter of light	0 cm.	Br.	7 4 9	5 4 11	10 3 7	6 0 14	10 5 5	4 4 12	27 12 21	15 8 37
			20%=	55%Lw	15%=	70%Lw	25%=	60%Lw	20%=	62%Lw
		Size	9 4 7	4 6 10	11 3 6	5 1 14	8 7 5	5 4 11	28 14 18	14 11 35
			20%=	50%Lw	15%=	70%Lw	35%=	55%Lw	23%=	58%Lw
	= diameter of light	Br.	9 3 8	5 0 15	10 2 8	2 0 18	7 5 8	1 0 19	26 10 24	8 0 52
			15%=	75%Lw	10%=	90%Lw	25%=	95%Lw	17%=	87%Lw
		Size	10 3 7	4 0 16	8 4 8	3 1 16	7 8 5	4 2 14	25 15 20	11 3 46
			15%=	80%Lw	20%=	80%Lw	40%=	70%Lw	25%=	77%Lw
	2 × diameter of light	Br.	10 2 8	0 0 20	9 2 9	1 0 19	11 0 9	4 0 16	30 4 26	5 0 55
			10%=	100%Lw	10%=	95%Lw	0%=	80%Lw	7%=	92%Lw
		Size	9 1 10	3 3 14	4 7 9	2 1 17	8 2 10	6 0 14	21 10 29	11 4 45
			5%=	70%Lw	35%=	85%Lw	10%=	60%Lw	17%=	75%Lw
	13 cm.	Br.	12 3 5	2 0 18	8 5 7	3 1 16	5 6 9	5 1 14	25 14 21	10 2 48
			15%=	90%Lw	25%=	80%Lw	30%=	70%Lw	23%=	80%Lw
		Size	7 7 6	3 0 17	8 5 7	4 1 15	7 7 6	2 3 15	22 19 19	9 4 47
			35%=	85%Lw	25%=	75%Lw	35%=	75%Lw	32%=	78%Lw
	Total	Br.	4 9 7	7 7 6	6 9 5	3 7 10	7 10 3	5 8 7	17 28 15	15 22 23
			45%=	30%Lw	45%=	50%Lw	50%=	35%Lw	47%=	38%Lw
		Size	6 7 7	6 7 7	7 8 5	5 7 8	8 8 4	7 6 7	21 23 16	18 20 22
			35%=	35%Lw	40%=	40%Lw	40%=	35%Lw	38%=	37%Lw
Total without 13 cm. position		Br.	42 21 37	19 11 70	43 21 36	15 8 77	40 26 34	19 13 68	125 68 107	53 32 215
			21%=	70%Lw	21%=	77%Lw	26%=	68%Lw	23%=	72%Lw
		Size	41 22 37	20 16 64	38 27 35	19 11 70	38 32 30	24 15 61	117 81 102	63 42 195
			22%=	64%Lw	27%=	70%Lw	32%=	61%Lw	27%=	65%Lw
		Br.	38 12 30	12 4 64	37 12 31	12 1 67	33 16 31	14 5 61	108 40 92	38 10 192
			15%=	80%Lw	15%=	84%Lw	20%=	76%Lw	17%=	80%Lw
		Size	35 15 30	14 9 57	31 19 30	14 4 62	30 24 26	17 9 54	96 58 86	45 22 173
			19%=	71%Lw	24%=	78%Lw	30%=	68%Lw	24%=	72%Lw

Discussion of Table X

In the above table the characteristic phenomenon appears as follows:

A—Comparison of the three sizes of aperture. It appears most clearly, both in size and brightness judgments, with the medium size (2 cm.) and is least noticeable with the 4 cm. aperture. This is, in a measure, true both for the totals including the 13 cm. divergence results and for the totals without these results but the difference between the three apertures is less noticeable in the totals without the 13 cm. divergence results than in those which contain these results.

B—Comparison of the five divergences. It appears most clearly, both in size and brightness judgments, where the divergence was either ½ the diameter of one light or was equal to the diameter. It was decreasingly present in the other divergences in the following order; divergence 2 x. the light diameter, 0 divergence, 13 cm. divergence.

C—Comparison of size with brightness judgments. The phenomenon was, on the whole, more striking in the brightness judgments than in the size judgments. This did not, however, hold for the O and 2 x. divergences, where it was about equally noticeable. In the fifteen sets given above the phenomenon failed to appear once in brightness judgments (1 cm.-13 cm.), once in size judgments (4 cm.-13 cm.). It appeared only slightly in one set of brightness judgments (4 cm.-13 cm.) and in one set of size judgments (1 cm.-13 cm.). In one set of brightness judgments (4 cm.-13 cm.) and in one set of size judgments (1 cm.-13 cm.) the preference for the lower light was paralleled by an equal or greater preference for one of the lights in the horizontal position. In these fifteen sets of judgments the phenomenon appeared more clearly in size judgments than in brightness judgments three times (1 cm-½, 4 cm.-2 x., 1 cm.-13 cm.), was about equally noticeable in the two types of judgments twice (1 cm.-0 cm., 2 cm.-0 cm.) and was more apparent in the brightness judgments ten times.

TABLE XI—INDIVIDUAL RESULTS—SUBJECT P.

Distance between lights	Judgment on		Diameter of lights: 1 cm. Horiz Lf = Rt	1 cm. Vert Up = Lw	2 cm. Horiz Lf = Rt	2 cm. Vert Up = Lw	4 cm. Horiz Lf = Rt	4 cm. Vert Up = Lw	Total on 1, 2 and 4 cm. lights Horiz Lf = Rt	Total on 1, 2 and 4 cm. lights Vert Up = Lw
0 cm.	Br.		10 1 9 5%=	1 7 12 60%Lw	9 8 3 40%=	7 1 12 60%Lw	6 11 3 55%=	5 5 10 50%Lw	25 20 15 33%=	13 13 34 57%Lw
	Size		10 1 9 5%=	2 11 7 35%Lw	8 10 2 50%=	5 1 14 70%Lw	7 7 6 35%=	6 5 9 45%Lw	25 18 17 30%=	13 17 30 50%Lw
½ diameter of light	Br.		5 12 3 60%=	4 5 4 20%Lw	6 10 4 50%=	4 2 14 70%Lw	7 5 8 25%=	2 6 12 60%Lw	18 27 15 45%=	10 13 37 62%Lw
	Size		8 7 5 35%=	5 8 7 35%Lw	5 6 9 30%=	4 3 13 65%Lw	7 7 6 35%=	2 9 9 45%Lw	20 20 20 33%=	11 20 29 48%Lw
= diameter of light	Br.		8 6 6 30%=	4 3 13 65%Lw	5 13 2 65%=	4 1 15 75%Lw	8 6 6 30%=	4 4 12 60%Lw	21 25 14 42%=	12 8 40 67%Lw
	Size		7 8 5 40%=	4 5 11 55%Lw	7 7 6 35%=	6 2 12 60%Lw	9 6 5 30%=	4 4 12 60%Lw	23 21 16 35%=	14 11 35 58%Lw
2 × diameter of light	Br.		8 6 6 30%=	5 5 10 50%Lw	9 4 7 20%=	3 0 17 85%Lw	9 6 5 30%=	2 3 15 75%Lw	26 16 18 27%=	10 8 42 70%Lw
	Size		9 6 5 30%=	4 4 12 60%Lw	9 4 7 20%=	2 4 14 70%Lw	8 4 8 20%=	6 2 12 60%Lw	26 14 20 23%=	12 10 38 47%Lw
13 cm.	Br.		7 11 2 55%=	7 4 9 45%Lw	5 10 5 55%=	4 6 10 50%Lw	3 13 4 65%=	7 8 5 25%Lw	15 34 11 57%=	18 18 24 40%Lw
	Size		4 12 4 60%=	8 2 10 50%Lw	6 11 3 55%=	4 8 8 40%Lw	4 12 4 60%=	8 7 5 25%Lw	14 35 11 58%=	20 17 23 38%Lw
Total	Br.		38 36 26 36%=	21 24 55 55%Lw	34 45 21 45%=	22 10 68 68%Lw	33 41 26 41%=	20 26 54 54%Lw	105 122 73 41%=	63 60 177 59%Lw
	Size		38 34 28 34%=	23 30 47 47%Lw	35 38 27 38%=	21 18 61 61%Lw	35 36 29 36%=	26 27 47 47%Lw	108 108 84 36%=	70 75 155 52%Lw
Total without 13 cm. position	Br.		31 25 24 31%=	14 20 46 58%Lw	29 35 16 44%=	18 4 58 73%Lw	30 28 22 35%=	13 18 49 61%Lw	90 88 62 37%=	45 42 153 64%Lw
	Size		34 22 24 28%=	15 28 37 46%Lw	29 27 24 34%=	17 10 53 66%Lw	31 24 25 30%=	18 20 42 53%Lw	94 73 73 30%=	50 58 132 55%Lw

Discussion of Table XI

In the above table the characteristic phenomenon appears as follows:

A—Comparison of the three sizes of apertures. It appears most clearly, both in size and brightness judgments, in the medium size (2 cm.). This is true both for the totals including the 13 cm. divergence results and for the totals without these results. In the totals including the 13 cm. divergence results it appears about equally with the 1 cm. and 4 cm. apertures. In the totals without the 13 cm. divergence results it appears more clearly in the 4 cm. aperture than with the 1 cm. In both totals, however, the 1 cm. and 4 cm. aperture results show the phenomenon to an appproximately equal extent while the 2 cm. aperture results show it much more clearly than either of the other sizes.

B—Comparison of the five divergences. It appears most clearly, both in size and brightness, where the divergence was 2 x. the light diameter. It was decreasingly present in the other divergences in the following order; divergence ½ light diameter, equal to light diameter, 0 divergence, 13 cm. divergence.

C—Comparison of size with brightness judgments. The phenomenon appeared more clearly in the latter throughout. In the fifteen sets given above it failed to appear twice in brightness judgments (1 cm.-½, 4 cm.-13 cm.), once in size judgments (4 cm.-13 cm.). It appeared very slightly in one set of brightness judgments (1 cm.-13 cm), twice in size judgments (1 cm.-½, 1 cm.-13 cm.). The reverse case, *i.e.* preference for the upper light, appeared once in brightness (4 cm.-13 cm.), once in size (4 cm.-13 cm.) judgments. In two sets of brightness judgments (1 cm.-13 cm., 2 cm.-0 cm.) and two sets of size judgments (2 cm.-0 cm., 1 cm.-½) the preference for the lower light was paralleled by an equal or greater preference for one of the lights in the horizontal position. In these fifteen sets the phenomenon appeared more clearly in the size than in the brightness judgments three times (2 cm.-0 cm., 1 cm.-½, 1 cm.-2 x.), was about equally noticeable in the two types of judgment twice (4 cm.-equal, 1 cm.-13 cm.) and was more noticeable in the brightness judgments ten times.

Discussion of Tables VIII-XI

A—Comparison of the three sizes of apertures. It was distinctly more evident in the medium (2 cm.) size than in either of the other apertures. This was true for all subjects and for totals both with and without the 13 cm. divergence results. The relative importance of the phenomenon in the 1 cm. and 4 cm. apertures varied with the different subjects. For two subjects (F. and A.) it was least noticeable in the 4 cm. aperture. For one subject (H.) the opposite was true, while for the fourth subject (P.) the 1 cm. aperture showed the phenomenon least clearly in the totals without the 13 cm. divergence results but the two apertures were about equal in this respect in the totals including the 13 cm. divergence results. For 3 subjects (F., H. and P.) the difference between the three apertures, as to the importance of the phenomenon, appeared more clearly in the totals without the 13 cm. divergence results but for one subject (A.) the reverse was the case.

B—Comparison of the five divergences. Taking the average of all subjects the phenomenon appeared most clearly in the judgments where the divergence was equal the diameter of one light. It was decreasingly important in the other divergences in the following order; divergence ½ light diameter, divergence 2 x. light diameter, 0 divergence, 13 cm. divergence. This order did not hold exactly for each individual subject (see individual tables 8 to 11). The greatest variation from the average occurred with subject P., where the phenomenon was most apparent with the divergence 2 x the light diameter, and decreasingly present with the divergence ½ the light diameter, equal to the diameter, 0 divergence and 13 cm. divergence. With all subjects the 13 cm. divergence showed the phenomenon least clearly and the 0 divergence was next to the lowest in this respect.

In no case, with any subject, did the phenomenon wholly fail to appear, nor did the reverse case appear, in the totals for any one divergence (all three apertures), or in the totals for any one aperture (all five divergences). This holds true both for size and brightness judgments.

It appeared only slightly in several of the 13 cm. divergence totals, particularly those of the size judgments.

C—Comparison of horizontal with vertical judgments. The judgments of H. and F. ran very closely together throughout. This is particularly striking in the grand totals but is quite evident in the totals for particular apertures and divergences. Both averaged over 50 per cent of equality judgments in the horizontal position and over 60 per cent of judgments favoring the lower light in the vertical position, both in size and brightness. The judgments of equality in the vertical position averaged, with these two subjects, under 30 per cent and for the totals without 13 cm. results, under 20 per cent for both size and brightness. Both showed a slight preference for the right hand light in the horizontal position. This was by no means constant and was so slight as to be readily noticed only in the grand totals. It averaged less than 1 per cent. Subject P. showed the characteristic preference for the lower light less strikingly than the two preceding subjects. His judgments for this light averaged between 50 per cent and 60 per cent with a larger number of judgments for the upper light than was the case with the two previous subjects. His judgments in the horizontal position rather consistently favored the left hand light and his judgments of equality were less numerous in this position than was the case in the judgments of H. and F. His preference for the left hand light, however, never equaled the preference for the lower light in the totals of any aperture or divergence and in the grand totals this prference for the left was much less than the preference for the lower. In only one case (size totals, without 13 cm. divergence, for the 1 cm. aperture) were the equality judgments of this subject greater in the vertical than in the horizontal position and in the grand totals the horizontal equality judgments were much in excess of the vertical. The vertical judgments of subject A. followed those of subjects H. and F. rather closely. His judgments favoring the lower light were even more numerous than those of subjects H. and F. This was partially compensated by the fact that his judgments favoring the upper light were also

more numerous than those of H. and F. and the phenomenon was, consequently, slightly less noticeable in his case than in that of H. and F., though decidedly more so than in the case of subject P. His results differed from those of the three other subjects in showing a much smaller number of judgments of equality in both the vertical and horizontal positions. These equality judgments were, however, consistently more numerous in the horizontal than in the vertical position and the preference shown for the left hand light in the horizontal judgments equalled that shown for the lower light in only one case (size totals for 13 cm. divergence) and in the grand totals was very much less, in both size and brightness.

Third Apparatus, first series. Results with all three apertures taken together given for four colors and five divergences

TABLE XII—INDIVIDUAL RESULTS—SUBJECT F.

Distance between lights	Judgment on	Color: Y Horiz Lf = Rt	Y Vert Up = Lw	R Horiz Lf = Rt	R Vert Up = Lw	G Horiz Lf = Rt	G Vert Up = Lw	W Horiz Lf = Rt	W Vert Up = Lw	Total Horiz Lf = Rt	Total Vert Up = Lw
0 cm.	Br.	10 12 2 50%=	2 10 12 50%Lw	2 8 2 67%=	1 2 9 75%Lw	6 4 2 33%=	3 2 7 58%Lw	4 4 4 33%=	2 3 7 58%Lw	22 28 10 47%=	8 17 35 58%Lw
	Size	9 5 10 21%=	6 8 10 42%Lw	3 5 4 42%=	2 5 5 42%Lw	4 4 4 33%=	3 4 5 83%Lw	4 2 6 17%=	1 4 7 58=Lw	20 16 24 27%=	12 21 27 45%Lw
½ diameter of light	Br.	3 18 3 75%=	4 0 20 83%Lw	4 7 1 58%=	2 0 10 83%Lw	1 9 2 75%=	1 0 11 92%Lw	1 8 3 67%=	2 0 10 83%Lw	9 42 9 70%=	9 0 51 85%Lw
	Size	8 12 4 50%=	6 6 12 50%Lw	3 6 3 50%=	2 2 8 67%Lw	2 8 2 67%=	1 4 7 58%Lw	3 7 2 58%=	2 4 6 50%Lw	16 33 11 55%=	11 16 33 55%Lw
= diameter of light	Br.	4 14 6 58%=	0 3 21 88%Lw	1 8 3 67%=	0 1 11 92%Lw	1 11 0 92%=	0 1 11 92%Lw	2 8 2 67%=	1 1 10 83%Lw	8 41 11 68%=	1 6 53 88%Lw
	Size	4 13 7 54%=	2 8 14 58%Lw	2 9 1 75%=	4 3 5 42%Lw	2 6 4 50%=	0 2 10 83%Lw	2 7 3 58%=	0 4 8 67%Lw	10 35 15 58%=	6 17 37 62%Lw
2 × diameter of light	Br.	0 12 12 50%=	4 5 15 63%Lw	0 9 3 75%=	0 2 10 83%Lw	2 8 1 67%=	0 5 7 58%Lw	3 8 1 67%=	1 4 7 58%Lw	5 38 17 63%=	5 16 39 65%Lw
	Size	5 15 4 63%=	8 6 10 42%Lw	2 9 1 75%=	3 3 6 50%Lw	1 10 1 83%=	4 4 4 33%Lw	2 6 4 50%=	5 1 6 50%Lw	10 40 10 67%=	20 14 26 43%Lw
13 cm.	Br.	8 6 10 25%=	2 7 15 63%Lw	3 8 1 67%=	2 3 7 58%Lw	3 2 7 17%=	2 3 7 58%Lw	5 3 4 25%=	4 2 6 50%Lw	19 19 22 32%=	10 15 35 58%Lw
	Size	6 10 8 42%=	4 12 8 33%Lw	3 5 4 42%=	1 5 6 50%Lw	2 6 4 50%=	2 6 4 33%Lw	3 4 5 33%=	1 7 4 33%Lw	14 25 21 42%=	8 30 22 37%Lw
Total	Br.	25 62 33 53%=	12 25 83 69%Lw	10 40 10 67%=	5 8 47 78%Lw	13 35 12 58%=	6 11 43 72%Lw	15 31 14 52%=	10 10 40 67%Lw	63 168 69 56%=	33 54 213 71%Lw
	Size	32 55 33 46%=	26 40 54 45%Lw	13 34 13 57%=	12 18 30 50%Lw	11 34 15 57%=	10 20 30 50%Lw	14 26 20 43%=	9 20 31 52%Lw	70 149 81 50%=	57 98 145 48%Lw
Total without 13 cm. position	Br.	17 56 23 58%=	10 18 68 71%Lw	7 32 9 67%=	3 5 40 83%Lw	10 33 5 69%=	4 8 36 75%Lw	10 28 10 58%=	6 8 34 71%Lw	44 149 47 62%=	23 39 178 74%Lw
	Size	26 45 25 47%=	22 28 46 48%Lw	10 29 9 60%=	11 13 24 50%Lw	9 28 11 58%=	8 14 26 54%Lw	11 22 15 46%=	8 13 27 56%Lw	56 124 60 52%=	49 68 123 51%Lw

Discussion of Table XII

In the above table the characteristic phenomenon appears as follows:

A—Comparison of the four colors. In judgments on brightness it appears most clearly with the red, next with the green, next the yellow and least of all with the white. This holds true both of the totals including the 13 cm. divergence results and of those without these results. The difference is very slight, however, between the green and yellow in the totals with the 13 cm. results and between the yellow and white in the totals without the 13 cm. results. The most striking difference in the prominence of the phenomenon with the different colors in brightness judgments is concerned with the red, where it is distinctly more prominent than in any of the other colors, in both sets of totals. In judgments on size it appears most clearly with the white, next with the green, next the red and least of all with the yellow. This holds true both for the totals including the 13 cm. results and for the totals without these results but the difference between the white and green is very slight and the greater preference for the lower light in these colors is partially offset by a greater inequality in the horizontal judgments.

TABLE XIII—INDIVIDUAL RESULTS—SUBJECT H.

Distance between lights	Judgment on	Color: Y Lf = Rt Horiz	Y Up = Lw Vert	R Lf = Rt Horiz	R Up = Lw Vert	G Lf = Rt Horiz	G Up = Lw Vert	W Lf = Rt Horiz	W Up = Lw Vert	Total Lf = Rt Horiz	Total Up = Lw Vert
0 cm.	Size	6 14 4	8 2 14	2 8 2	1 3 8	2 8 2	0 4 8	1 3 8	1 3 8	11 33 16	10 12 38
	Br.	58%=	58%Lw	66%=	66%Lw	66%=	66%Lw	25%=	66%Lw	55%=	63%Lw
½ diameter of light	Size	7 12 5	4 4 16	4 4 4	4 2 6	7 3 2	0 8 4	3 6 3	2 6 4	21 25 14	10 20 30
	Br.	50%=	66%Lw	33%=	50%Lw	25%=	33%Lw	50%=	33%Lw	42%=	50%Lw
= diameter of light	Size	6 15 3	0 3 21	2 10 0	0 1 11	2 8 2	0 2 10	2 7 3	2 4 6	12 40 8	2 10 48
	Br.	63%=	88%Lw	83%=	92%Lw	66%=	83%Lw	58%=	50%Lw	67%=	80%Lw
2 × diameter of light	Size	10 10 4	6 2 16	3 9 0	0 1 11	2 7 3	1 9 2	3 7 2	0 5 7	18 33 9	7 17 36
	Br.	42%=	66%Lw	75%=	92%Lw	58%=	17%Lw	58%=	58%Lw	55%=	60%Lw
13 cm.	Size	6 17 1	0 4 20	0 9 3	0 0 12	2 10 0	0 0 12	1 8 3	0 2 10	9 44 7	0 6 54
	Br.	71%=	83%Lw	75%=	100%Lw	83%=	100%Lw	66%=	83%Lw	73%=	90%Lw
Total	Size	5 13 6	4 6 14	0 10 2	0 0 12	4 4 4	0 0 12	0 8 4	0 4 8	9 35 16	4 10 46
	Br.	54%=	58%Lw	83%=	100%Lw	33%=	100%Lw	66%=	66%Lw	58%=	77%Lw
Total without 13 cm. position	Size	6 8 10	2 12 10	0 11 1	0 1 11	1 9 2	2 1 9	3 7 2	1 6 5	10 35 15	5 20 35
	Br.	33%=	42%Lw	92%=	92%Lw	75%=	75%Lw	58%=	42%Lw	58%=	58%Lw
	Size	3 11 10	3 14 7	4 7 1	3 1 8	0 11 1	1 2 9	3 4 5	3 2 7	10 33 17	10 19 31
	Br.	46%=	29%Lw	58%=	66%Lw	92%=	75%Lw	33%=	58%=	55%=	52%Lw
	Size	8 5 11	7 8 9	2 5 5	3 2 7	7 1 4	2 4 6	8 1 3	5 3 4	25 12 23	17 17 26
	Br.	21%=	38%Lw	42%=	58%Lw	8%=	50%Lw	8%=	33%Lw	20%=	43%Lw
	Size	10 6 8	8 7 9	4 4 4	3 4 5	4 3 5	4 4 4	5 4 3	3 3 6	23 17 20	18 18 24
	Br.	25%=	38%Lw	33%=	42%Lw	25%=	33%Lw	33%=	50%Lw	28%=	40%Lw
	Size	32 59 29	17 29 74	6 43 11	4 7 49	14 36 10	4 11 45	15 26 19	9 18 33	67 164 69	34 65 201
	Br.	49%=	62%Lw	72%=	82%Lw	60%=	75%Lw	43%=	55%Lw	55%=	41%Lw
	Size	35 52 33	25 33 62	15 34 11	10 8 42	17 28 15	6 23 31	14 29 17	8 20 32	81 143 76	49 84 167
	Br.	43%=	52%Lw	57%=	70%Lw	47%=	52%Lw	48%=	53%Lw	48%=	56%Lw
	Size	24 54 18	10 21 65	4 38 6	1 5 42	7 35 6	2 7 39	7 25 16	4 15 29	42 152 46	17 48 175
	Br.	56%=	68%Lw	79%=	88%Lw	73%=	81%Lw	52%=	60%Lw	63%=	73%Lw
	Size	25 46 25	17 26 53	11 30 7	7 4 37	13 25 10	2 19 27	9 25 14	5 17 26	58 126 56	31 66 143
	Br.	48%=	55%Lw	63%=	77%Lw	52%=	56%Lw	52%=	54%Lw	53%=	60%Lw

Discussion of Table XIII

In the above table the characteristic phenomenon appears as follows:

A—Comparison of the four colors. In judgments on brightness it appears most clearly with the red, next with the green, next the yellow and least of all with the white. This holds true both of the totals including the 13 cm. divergence results and of the totals without these results, with the single exception that, in the totals without the 13 cm. results the yellow and white show the phenomenon to an approximately equal extent. In judgments on size it appears about equally with the red and green, in the totals including the 13 cm. results, while the green shows it most clearly in the totals without the 13 cm. results. In both sets of totals the yellow shows it least clearly and the white next to the least. In both size and brightness judgments for both sets of totals the red and green show it more consistently than the yellow and white, with the red slightly ahead. To this extent the prominence of the phenomenon in the four colors runs parallel in the size and brightness judgments but its relative prominence in the red and green does not run parallel in the two types of judgment, nor in the yellow and white.

TABLE XIV—Individual Results—Subject A.

Distance between lights	Judgment on	Color: Y Horiz Lf = Rt	Y Vert Up = Lw	R Horiz Lf = Rt	R Vert Up = Lw	G Horiz Lf = Rt	G Vert Up = Lw	W Horiz Lf = Rt	W Vert Up = Lw	Total Horiz Lf = Rt	Total Vert Up = Lw
0 cm.	Size	13 3 8	8 0 16	2 6 4	2 2 8	4 3 5	0 4 8	8 0 4	5 2 5	27 12 21	15 8 37
		13%=	66%Lw	50%=	66%Lw	25%=	66%Lw	0%=	42%Lw	20%=	62%Lw
	Br.	13 5 6	8 2 14	3 6 3	2 3 7	5 3 4	0 3 9	7 0 5	4 3 5	28 14 18	14 11 35
		21%=	58%Lw	50%=	58%Lw	25%=	75%Lw	0%=	42%Lw	23%=	58%Lw
½ diameter of light	Size	11 5 8	5 0 19	8 0 4	0 0 12	5 3 4	0 0 12	2 2 8	3 0 9	26 10 24	8 0 52
		21%=	79%Lw	0%=	100%Lw	25%=	100%Lw	17%=	75%Lw	17%=	87%Lw
	Br.	10 7 7	5 2 17	7 2 3	0 0 12	5 2 5	1 1 10	3 4 5	5 0 7	25 15 20	11 3 46
		29%=	71%Lw	17%=	100%Lw	17%=	83%Lw	33%=	58%Lw	25%=	77%Lw
= diameter of light	Size	11 2 11	3 0 21	3 2 7	0 0 12	7 0 5	1 0 11	9 0 3	1 0 11	30 4 26	5 0 55
		8%=	88%Lw	17%=	100%Lw	0%=	92%Lw	0%=	92%Lw	7%=	92%Lw
	Br.	9 2 13	8 0 16	2 2 8	0 1 11	3 4 5	2 1 9	7 2 3	1 2 9	21 10 29	11 4 45
		8%=	66%Lw	17%=	92%Lw	33%=	75%Lw	17%=	75%Lw	17%=	75%Lw
2 × diameter of light	Size	10 4 10	4 2 18	4 6 2	0 0 12	4 4 4	1 0 11	7 0 5	5 0 7	25 14 21	10 2 48
		17%=	75%Lw	50%=	100%Lw	33%=	92%Lw	0%=	58%Lw	23%=	80%Lw
	Br.	9 7 8	3 2 19	4 6 2	1 0 11	3 5 4	1 1 10	6 1 5	4 1 7	22 19 19	9 4 47
		29%=	79%Lw	50%=	92%Lw	42%=	83%Lw	8%=	58%Lw	32%=	78%Lw
13 cm.	Size	8 8 8	7 6 11	3 6 3	5 5 2	2 8 2	1 9 2	4 6 2	2 2 8	17 28 15	15 22 23
		33%=	46%Lw	50%=	17%Lw	66%=	17%Lw	50%=	66%Lw	47%=	38%Lw
	Br.	10 6 8	9 6 9	3 5 4	5 4 3	3 6 3	3 7 2	5 6 1	1 3 8	21 23 16	18 20 22
		25%=	38%Lw	42%=	25%Lw	50%=	17%Lw	50%=	66%Lw	38%=	37%Lw
Total	Size	53 22 45	27 8 85	20 20 20	7 7 46	22 18 20	3 13 44	30 8 22	16 4 40	125 68 107	53 32 215
		18%=	71%Lw	33%=	77%Lw	30%=	73%Lw	13%=	67%Lw	23%=	72%Lw
	Br.	51 27 42	33 12 75	19 21 20	8 8 44	19 20 21	7 13 40	28 13 19	15 9 36	117 81 102	63 42 195
		23%=	63%Lw	35%=	73%Lw	33%=	67%Lw	22%=	60%Lw	27%=	65%Lw
Total without 13 cm. position	Size	45 14 37	20 2 74	17 14 17	2 2 44	20 10 18	2 4 42	26 2 20	14 2 32	108 40 92	38 10 192
		15%=	77%Lw	29%=	92%Lw	21%=	88%Lw	4%=	67%Lw	16%=	80%Lw
	Br.	41 21 34	24 6 66	16 16 16	3 4 41	16 14 18	4 6 38	23 7 18	14 6 28	96 58 86	45 22 173
		22%=	69%Lw	33%=	85%Lw	29%=	79%Lw	15%=	58%Lw	24%=	72%Lw

Discussion of Table XIV

In the above table the characteristic phenomenon appears as follows:

A—Comparison of the four colors. In judgments on brightness it appears most clearly with the green, next with the red, next the yellow and least of all with the white. The one exception to this order is that the red and green, in totals without 13 cm. divergence results, are sensibly equal. In size judgments it appears, on the whole, most clearly with the red, next with the green, next the yellow and least of all with the white. The red and green, however, are sensibly equal in the totals with the 13 cm. results, as are also the yellow and white. The colors naturally fall into two pairs, the red and green running close together and the white and yellow. This is particularly the case in the size totals with 13 cm. results, as just mentioned under size results. In this characteristic of the pairing of the four colors the size and brightness results run parallel. Taken separately they do not run quite parallel as the green shows the phenomenon most clearly in the brightness totals with 13 cm. results while the red shows it most clearly in the size totals without 13 cm. results.

TABLE XV—Individual Results—Subject P.

Distance between lights Judgment on	Color: Y Horiz Lf = Rt	Y Vert Up = Lw	R Horiz Lf = Rt	R Vert Up = Lw	G Horiz Lf = Rt	G Vert Up = Lw	W Horiz Lf = Rt	W Vert Up = Lw	Total Horiz Lf = Rt	Total Vert Up = Lw
0 cm. Size Br.	8 10 6 42%=	6 6 12 50%Lw	6 4 2 33%=	2 1 9 75%Lw	6 2 4 17%=	2 4 6 50%Lw	5 4 3 33%=	3 2 7 58%Lw	25 20 15 33%=	13 13 34 57%Lw
½ diameter of light Size Br.	8 8 8 33%=	5 6 13 54%Lw	4 6 2 50%=	2 4 6 50%Lw	6 2 4 17%=	3 4 5 42%Lw	7 2 3 17%=	3 3 6 50%Lw	25 18 17 30%=	13 17 30 50%Lw
= diameter of light Size Br.	7 11 6 46%=	6 6 12 50%Lw	4 4 4 33%=	1 0 11 92%Lw	3 8 1 66%=	0 4 8 66%Lw	4 4 4 33%=	3 3 6 50%Lw	18 27 15 45%=	10 13 37 62%Lw
2 × diameter of light Size Br.	9 8 7 33%=	6 9 9 38%Lw	5 3 4 25%=	1 2 9 75%Lw	3 7 2 58%=	1 5 6 50%Lw	3 2 7 17%=	3 4 5 42%Lw	20 20 20 33%=	11 20 29 48%Lw
13 cm. Size Br.	10 10 4 42%=	8 4 12 50%Lw	2 8 2 66%=	2 0 10 83%Lw	6 2 4 17%=	0 2 10 83%Lw	3 5 4 42%=	2 2 8 66%Lw	21 25 14 42%=	12 8 40 67%Lw
Total Size Br.	11 8 5 33%=	9 5 10 42%Lw	2 6 4 50%=	2 2 8 66%Lw	6 3 3 25%=	0 3 9 75%Lw	4 4 4 33%=	3 1 8 66%Lw	23 21 16 35%=	14 11 35 58%Lw
Total without 13 cm. position Size Br.	8 8 8 33%=	5 2 17 71%Lw	6 4 2 33%=	0 0 12 100%Lw	5 4 3 33%=	3 2 7 58%Lw	7 0 5 0%=	2 4 6 50%Lw	26 16 18 27%=	10 8 42 70%Lw
	10 6 8 25%=	4 2 18 75%Lw	4 4 4 33%=	2 2 8 66%Lw	7 2 3 17%=	2 2 8 66%Lw	5 2 5 17%=	4 4 4 33%Lw	26 14 20 23%=	12 10 38 63%Lw
	5 14 5 58%=	8 10 6 25%Lw	5 3 4 25%=	1 4 7 58%Lw	2 8 2 66%=	4 1 7 58%Lw	3 9 0 75%=	5 3 4 33%Lw	15 34 11 57%=	18 18 24 40%Lw
	4 14 6 58%=	9 9 6 25%Lw	5 4 3 33%=	2 3 7 58%Lw	3 8 1 66%=	5 1 6 50%Lw	2 9 1 75%=	4 4 4 33%Lw	14 35 11 58%=	20 17 23 38%Lw
	38 53 29 44%=	33 28 59 49%Lw	23 23 14 38%=	6 5 49 82%Lw	22 24 14 40%=	9 13 38 63%Lw	22 22 16 37%=	15 14 31 52%Lw	105 122 73 41%Lw	63 60 177 59%Lw
	42 44 34 37%=	33 31 56 47%Lw	20 23 17 40%=	9 13 38 63%Lw	25 22 13 37%=	11 15 34 57%Lw	21 19 20 32%=	17 16 27 45%Lw	108 108 84 36%=	70 75 155 52%Lw
	33 39 24 41%=	25 18 53 55%Lw	18 20 10 42%=	5 1 42 88%Lw	20 16 12 33%=	5 12 31 65%Lw	19 13 16 27%=	10 11 27 56%Lw	90 88 62 37%=	45 42 153 64%Lw
	38 30 28 31%=	24 22 50 52%Lw	15 19 14 40%=	7 10 31 65%Lw	22 14 12 29%=	6 14 28 58%Lw	19 10 19 21%=	13 12 23 48%Lw	94 73 73 30%=	50 58 132 55%Lw

Discussion of Table XV

In the above table the characteristic phenomenon appears as follows:

A—Comparison of the four colors. In judgments on brightness it appears most clearly with the red, next with the green, next the white and least of all with the yellow. This holds true both of the totals including the 13 cm. divergence results and of the totals without these results. In the size judgments the order is the same, with the single exception that the yellow and white have changed places, the white showing the effect least clearly in these judgments. The difference between the results for the yellow and white, in both brightness and size and for both sets of totals, is much less marked than the difference between the green and these two colors, or the difference between the red and green. In fact the phenomenon is almost equally prominent in the yellow and white.

Discussion of Tables XII-XV

A—Comparison of the four colors. *Considering the totals of all subjects together.* In judgments on brightness the phenomenon appears most clearly with the red, next with the green, next the yellow and least of all with the white. This holds true both for the totals including the 13 cm. divergence results and for those without these results. In judgments on size it appears most clearly with the red and green, these being sensibly equal in this respect, then with the white and least of all with the yellow. In both the size and brightness judgments the colors fall into pairs, with reference to the relative importance of the phenomenon. The red and green show a comparatively slight difference (in the size judgments they are practically equal) and they both show the phenomenon much more clearly than the yellow and white, which are, in turn, very much alike.

Considering the four subjects separately. In the judgments on brightness the order of importance of the phenomenon in the different colors is the same for two of the subjects, F. and H., as for the totals of all subjects. The order of the colors for subject

A. is altered by the appearance of the phenomenon most clearly in the green, with the red next. A similar shift occurs between the yellow and white with subject P., yellow showing the effect least clearly. An exception to the general tendency of the colors to group in pairs of red-green and white-yellow occurs with subject F. in that the green and yellow are very nearly equal in the totals with the 13 cm. results. In the judgments on size there is relatively little uniformity in the order of colors for the different subjects, arranged according to the prominence of the phenomenon. Only with subject H, in the totals including the 13 cm. results, does the order coincide with that for the totals of all subjects. With subject F. an almost complete reversal of the order in the size judgments takes place (W-G-R-Y). The order for subject A. is identical with the order of the totals for all subjects on brightness judgments but is not the same as his own order on brightness judgments. The order of subject P. is the same for size and brightness judgments and is very near the order of the totals for all subjects on size.

Third Apparatus, first series. Comparison of brightness and size judgments. Results, with all four colors together, given for three apertures and five divergences

The results are classified into four types of relationship between the judgments on size and those on brightness.

I. Those cases in which the lights were reported as equal in both brightness and size.

II. Those cases in which one light was reported as both brighter and larger.

III. Those cases in which one light was reported as brighter, the other as larger.

IV. Those cases in which the lights were reported as equal in one of the two factors but unequal in the other.

TABLE XVI—Individual Results—Subject F.

Distance between lights	Types of judgment	Diameter of lights— 1 cm. Horiz		1 cm. Vert		2 cm. Horiz		2 cm. Vert		4 cm. Horiz		4 cm. Vert		Total of 1, 2 and 4 cm. lights Horiz		Vert	
0 cm.	I	8		3		5		3		3		8		16	27%	14	23%
	II	7		11		10		13		8		7		25	42%	31	52%
	III	0		1		1		2		6		2		7	11%	5	8%
	IV	5		5		4		2		3		3		12	20%	10	17%
½ diameter of light	I	5		4		5		6		7		6		17	28%	16	27%
	II	8		12		10		10		6		7		24	40%	29	48%
	III	3		0		2		3		4		0		9	15%	3	5%
	IV	4		4		3		1		3		7		10	17%	12	20%
= diameter of light	I	7		7		9		6		6		0		22	37%	13	22%
	II	7		8		5		10		8		7		20	33%	25	42%
	III	1		2		2		2		1		5		4	7%	9	15%
	IV	5		3		4		2		5		8		14	23%	13	22%
2 × diameter of light	I	3		1		5		5		6		4		14	23%	10	17%
	II	7		13		10		14		11		12		28	47%	39	65%
	III	3		2		2		0		0		2		5	8%	4	7%
	IV	7		4		3		1		3		2		13	22%	7	11%
13 cm.	I	2		4		5		11		3		2		10	17%	17	28%
	II	8		12		9		9		10		9		27	45%	30	50%
	III	3		2		3		0		0		4		6	10%	6	10%
	IV	7		2		3		0		7		5		17	28%	7	11%
Total	I	25		19		29		31		25		20		79	26%	70	23%
	II	37		56		44		56		43		42		124	42%	154	52%
	III	10		7		10		7		11		13		31	10%	27	9%
	IV	28		18		17		6		21		25		66	22%	49	16%
Total without 13 cm. position	I	23	29%	15	19%	24	30%	20	25%	22	28%	18	23%	69	29%	53	22%
	II	29	36%	44	55%	35	44%	47	59%	33	41%	33	41%	97	40%	124	52%
	III	7	9%	5	6%	7	9%	7	9%	11	14%	9	11%	25	10%	21	9%
	IV	21	26%	16	20%	14	18%	6	8%	14	18%	20	25%	49	20%	42	17%

TABLE XVII—INDIVIDUAL RESULTS—SUBJECT H.

Distance between lights	Types of judgment	Diameter of lights— 1 cm. Horiz		1 cm. Vert		2 cm. Horiz		2 cm. Vert		4 cm. Horiz		4 cm. Vert		Total of 1, 2 and 4 cm. lights Horiz		Vert	
0 cm.	I	7		3		9		3		6		5		22	37%	11	18%
	II	10		10		7		12		5		12		22	37%	34	57%
	III	1		2		0		3		1		0		2	3%	5	8%
	IV	2		5		4		2		8		3		14	23%	10	17%
½ diameter of light	I	11		4		14		2		8		2		33	55%	8	13%
	II	7		9		3		15		9		10		19	32%	34	57%
	III	0		2		0		0		1		5		1	2%	7	12%
	IV	2		5		3		3		2		3		7	12%	11	18%
= diameter of light	I	12		2		14		0		8		4		34	57%	6	10%
	II	4		14		2		17		7		14		13	22%	45	75%
	III	1		0		0		2		1		0		2	3%	2	3%
	IV	3		4		4		1		4		2		11	18%	7	12%
2 × diameter of light	I	10		5		14		5		4		6		28	47%	16	27%
	II	6		9		3		13		11		9		20	33%	31	52%
	III	0		4		0		2		0		0		0	0%	6	10%
	IV	4		2		3		0		5		5		12	20%	7	12%
13 cm.	I	3		5		3		6		5		5		11	18%	16	27%
	II	14		12		15		13		9		12		38	63%	37	62%
	III	2		2		0		1		2		0		4	7%	3	5%
	IV	1		1		2		0		4		3		7	12%	4	7%
Total	I	43		19		54		16		31		22		128	43%	57	19%
	II	41		54		30		70		41		57		112	37%	181	60%
	III	4		10		0		8		5		5		9	3%	23	8%
	IV	12		17		16		6		23		16		51	17%	39	13%
Total without 13 cm. position	I	40	50%	14	18%	51	64%	10	13%	26	33%	17	21%	117	49%	41	17%
	II	27	34%	42	53%	15	19%	57	71%	32	40%	45	56%	74	31%	144	60%
	III	2	3%	8	10%	0	0%	7	9%	3	4%	5	6%	5	2%	20	8%
	IV	11	14%	16	20%	14	18%	6	8%	19	24%	13	16%	44	18%	35	15%

Discussion of Table XVI

Comparison of size and brightness judgments.

In a large majority of cases the two types of judgment run together. (Approximately 70 per cent in the horizontal position and 75 per cent in the vertical.) The judgments of the second type alone make up nearly half of the total (47 per cent). The judgments of the third type, the extreme case of opposition between the brightness and size judgments, are correspondingly few in number (less than 10 per cent). The judgments of the fourth type make up about 19 per cent of the total. This type covers a large part of the cases in which a negative judgment was given, *i.e.* "cannot be sure of any difference," rather than a positive judgment, *i.e.* "they *are* equal." These negative judgments were much more frequent in the fourth type than in the first type. The judgments of the fourth type were somewhat more frequent in the horizontal than in the vertical position. In the fifteen sets given above (3 apertures, each in 5 divergences) it occurred more frequently in the horizontal position ten times, more frequently in the vertical twice and equally in the two positions three times. The judgments of the first type were decidedly more frequent in the horizontal and those of the second type in the vertical position. The judgments of the third type were practically equal in the two positions.

A—Comparison of the three sizes of apertures. The largest aperture, 4 cm., shows the smallest number of judgments tending to run together. With this aperture there are the smallest nomber of judgments of the first two types and the largest number of the third type. The medium sized aperture gives the largest number of identical size and brightness judgments (first and second types) with a number of opposite judgments (third type) approximately equal to those with the 1 cm. aperture. On the whole the size and brightness judgments tend to run most nearly together in the medium (2 cm.) aperture.

B—Comparison of the five divergences. There is very little difference between the five divergences in the extent to which the size and brightness judgments run parallel. This character-

istic is slightly more noticeable in the totals with divergence 2 x the light diameter than in those with the other divergences and slightly less noticeable with divergence = to the light diameter than in the other cases.

Discussion of Table XVII

Comparison of size and brightness judgments.

In a large majority of cases the two types of judgment run together. (Approximately 80 per cent both in the horizontal and vertical positions.) The judgments of the second type alone make up nearly half of the total (47 per cent), and in the vertical position these judgments amount to 60 per cent of the total judgments. The judgments of the third type are correspondingly few in number. (Approximately 5 per cent, and in the horizontal position less than 3 per cent.) The judgments of the fourth type make up about 16 per cent of the total. This type covers a large part of the cases in which a negative judgment was given. (See p. 74.) They were much more numerous in the fourth type than in the first type. The judgments of the fourth type were somewhat more numerous in the horizontal than in the vertical position. In only four of the fifteen sets given above were they more numerous in the vertical than in the horizontal position. The judgments of the first type were decidedly more numerous in the horizontal and those of the second type in the vertical position. The latter occurred nearly twice as frequently in the vertical as in the horizontal position. The judgments of the third type were about three times as numerous in the vertical as in the horizontal position.

A—Comparison of the three sizes of apertures. The medium sized aperture, 2 cm., shows the largest number of judgments tending to run together. With this aperture there are the largest number of judgments of the first two types and the smallest number of the third type. The smallest (1 cm.) and the largest (4 cm.) apertures are about equal in the tendency of the brightness and size judgments to coincide, with a slightly larger number of identical judgments (first and second types) in the 1 cm. aper-

ture, compensated for by a slightly larger number of opposite judgments (third type).

B—Comparison of the 5 divergences. The tendency of the size and brightness judgments to coincide in the different divergences is most noticeable in the divergence = to the light diameter, next in the 13 cm. divergence and decreasingly with the divergence twice the light diameter, ½ the diameter and 0 divergence. The difference between the five divergences in this respect is, however, not striking. Where it is most noticeable there are ninety-eight judgments of the first two types and four of the third type, as against eighty-nine of the first two types and seven of the third type where it is the least noticeable.

TABLE XVIII—Individual Results—Subject A.

Distance between lights	Types of judgment	Diameter of lights— 1 cm. Horiz		1 cm. Vert		2 cm. Horiz		2 cm. Vert		4 cm. Horiz		4 cm. Vert		Total of 1, 2 and 4 cm. lights Horiz		Vert	
0 cm.	I	4		2		2		0		5		3		11	18%	5	8%
	II	12		12		14		18		11		14		37	62%	44	73%
	III	4		0		2		1		2		1		8	13%	2	3%
	IV	0		6		2		1		2		2		4	7%	9	15%
½ diameter of light	I	2		0		2		0		4		0		8	13%	0	0%
	II	15		19		16		18		11		15		42	70%	52	87%
	III	1		1		0		1		0		1		1	2%	3	5%
	IV	2		0		2		1		5		4		9	15%	5	8%
= diameter of light	I	1		0		1		0		0		0		2	3%	0	0%
	II	17		14		12		18		16		18		45	75%	50	83%
	III	1		3		0		1		2		2		3	5%	6	10%
	IV	1		3		7		1		2		0		10	17%	4	7%
2 × diameter of light	I	3		0		4		0		5		1		12	20%	1	2%
	II	12		17		14		17		11		16		37	62%	50	83%
	III	1		3		0		1		1		1		2	3%	5	8%
	IV	4		0		2		2		3		2		9	15%	4	7%
13 cm.	I	7		6		7		6		8		5		22	37%	17	28%
	II	10		12		10		10		10		11		30	50%	33	55%
	III	1		0		0		2		0		0		1	2%	2	3%
	IV	2		2		3		2		2		4		7	12%	8	13%
Total	I	17		8		16		6		22		9		55	18%	23	8%
	II	66		74		66		81		59		74		191	64%	229	76%
	III	8		7		2		6		5		5		15	5%	18	6%
	IV	9		11		16		7		14		12		39	13%	30	10%
Total without 13 cm. position	I	10	13%	2	3%	9	11%	0	0%	14	18%	4	5%	33	14%	6	3%
	II	56	70%	62	78%	56	70%	71	89%	49	61%	63	79%	161	67%	196	82%
	III	7	9%	7	9%	2	3%	4	5%	5	6%	5	6%	14	6%	16	7%
	IV	7	9%	9	11%	13	16%	5	6%	12	15%	8	10%	32	13%	22	9%

Discussion of Table XVIII

Comparison of size and brightness judgments.

In a very large majority of cases the brightness and size judgments coincide. (Approximately 80 per cent in the horizontal and 85 per cent in the vertical position.) The judgments of the second type alone make up nearly ¾ of the total (72 per cent). The judgments of the third type are correspondingly few in number (6 per cent of the vertical and horizontal judgments together). The judgments of the first and fourth types are approximately equal in number. The judgments of the fourth type are somewhat more numerous in the horizontal than in the vertical position. The negative judgments (see p. 74) were more numerous in type four than in type one. Judgments of the first type were decidedly more numerous in the horizontal than in the vertical position while judgments of the second type were markedly and those of the third type slightly more frequent in the vertical position.

A—Comparison of the three sizes of apertures. The medium sized aperture (2 cm.) shows the largest number of identical size and brightness judgments. With this aperture there are the largest number of judgments of the first two types and the smallest number of the third type. In the other apertures the tendency toward identical size and brightness judgments is somewhat more noticeable in the 4 cm. results. The number of identical size and brightness judgments is sensibly equal in the two cases but the number of opposite judgments (third type) is somewhat larger in the 1 cm. than in the 4 cm. aperture, making the 1 cm. aperture the lowest in this respect. The difference between the 2 cm. aperture results and those for the other openings is considerably greater than the difference between the two others.

B—Comparison of the five divergences. The tendency of the size and brightness judgments to coincide, in the different divergences, is most noticeable where the divergence is either 13 cm. or ½ the light diameter, these two being sensibly equal in this respect. It is less noticeable in the divergence which is

2 x the light diameter and least of all in the divergence equal to the light diameter and the 0 divergence, these two latter being sensibly equal. The difference in the number of identical judgments in the different divergences is extremely slight (a difference of only five between the highest and the lowest) and the order given is made chiefly on the basis of the number of opposite judgments (third type).

TABLE XIX—INDIVIDUAL RESULTS—SUBJECT P.

Distance between lights	Types of judgment	Diameter of lights— 1 cm. Horiz		1 cm. Vert		2 cm. Horiz		2 cm. Vert		4 cm. Horiz		4 cm. Vert		Total of 1, 2 and 4 cm. lights Horiz		Vert	
0 cm.	I	1		7		7		1		7		5		15	25%	13	22%
	II	11		7		5		15		7		8		23	38%	30	50%
	III	8		2		4		4		2		7		14	23%	13	22%
	IV	0		4		4		0		4		0		8	13%	4	7%
½ diameter of light	I	7		5		6		2		5		6		18	30%	13	22%
	II	4		6		5		14		4		10		13	22%	30	50%
	III	4		6		5		3		9		1		18	30%	10	17%
	IV	5		3		4		1		2		3		11	18%	7	12%
= diameter of light	I	5		2		7		0		5		3		17	28%	5	8%
	II	7		12		3		14		10		13		20	33%	39	65%
	III	4		2		4		3		3		2		11	18%	7	12%
	IV	4		4		6		3		2		2		12	20%	9	15%
2 × diameter of light	I	4		4		0		0		4		2		8	13%	6	10%
	II	7		9		9		14		11		9		27	45%	32	53%
	III	5		6		3		2		3		8		11	18%	16	27%
	IV	4		1		8		4		2		1		14	23%	6	10%
13 cm.	I	11		1		10		5		8		6		29	48%	12	20%
	II	6		11		6		8		7		7		19	32%	26	43%
	III	2		4		3		3		2		4		7	12%	11	18%
	IV	1		4		1		4		3		3		5	8%	11	18%
Total	I	28		19		30		8		29		22		87	29%	49	16%
	II	35		45		28		65		39		47		102	34%	157	52%
	III	23		20		19		15		19		22		61	20%	57	19%
	IV	14		16		23		12		13		9		50	17%	37	12%
Total without 13 cm. position	I	17	21%	18	23%	20	25%	3	4%	21	26%	16	20%	58	24%	37	15%
	II	29	36%	34	43%	22	28%	57	71%	32	40%	40	50%	83	34%	131	55%
	III	21	26%	16	20%	16	20%	12	15%	17	21%	18	23%	54	23%	46	19%
	IV	13	16%	12	15%	22	28%	8	10%	10	13%	6	8%	45	19%	26	11%

Discussion of Table XIX

Comparison of size and brightness judgments.

In a majority of cases the two judgments run together (approximately 60 per cent in the horizontal position and 70 per cent in the vertical). The judgments of the second type make up 44 per cent of the total. The opposite judgments (third type) are considerably more numerous than those of the fourth type but less than those of either the first or second type. The judgments of the fourth type are the least numerous, making up less than 15 per cent of the total. The negative judgments (see p. 74) were relatively infrequent. The judgments of the first, third and fourth types were more numerous in the horizontal than in the vertical position, the first and fourth types markedly and the third type slightly so. The judgments of the second type were very decidedly more numerous in the vertical than in the horizontal position.

A—Comparison of the three sizes of apertures. The smallest aperture (1 cm.), shows the smallest number of identical size and brightness judgments. With this aperture there are the smallest number of judgments of the first two types and the largest number of the third type. The other two apertures show an approximately equal tendency of the size and brightness judgments to coincide. The identical judgments are a little more numerous in the 4 cm. aperture but this is compensated for by a correspondingly larger number of opposite judgments (third type) with this aperture. If anything the judgments with the medium aperture show the tendency of the size and brightness judgments to coincide a little more clearly than those with the 4 cm. aperture.

B—Comparison of the five divergences. The tendency of the size and brightness judgments to coincide is most noticeable in the 13 cm. divergence, next in the divergence equal to the light diameter, next in the 0 divergence and least of all in the divergences ½ and 2 x the light diameter, which are sensibly equal in this respect. The difference between the five divergences is not, however, very striking in this respect.

TABLE XX—Results for all Four Subjects Totaled

Distance between lights	Types of judgment	Diameter of lights— 1 cm. Horiz		1 cm. Vert		2 cm. Horiz		2 cm. Vert		4 cm. Horiz		4 cm. Vert		Total of 1, 2 & 4 cm. lights Horiz		Vert	
0 cm.	I	20		15		23		7		21		21		64	27%	43	18%
	II	40		40		36		58		31		41		107	45%	139	58%
	III	13		5		7		10		11		10		31	13%	25	10%
	IV	7		20		14		5		17		8		38	16%	33	14%
½ diameter of light	I	25		13		27		10		24		14		76	32%	37	15%
	II	34		46		34		57		30		42		98	41%	145	60%
	III	8		9		7		7		14		7		29	12%	23	10%
	IV	13		12		12		6		12		17		37	15%	35	15%
= diameter of light	I	25		11		31		6		19		7		75	31%	24	10%
	II	35		48		22		59		41		52		98	41%	159	66%
	III	7		7		6		8		7		9		20	8%	24	10%
	IV	13		14		21		7		13		12		47	20%	33	14%
2 × diameter of light	I	20		10		23		10		19		13		62	26%	33	14%
	II	32		48		36		58		44		46		112	47%	152	63%
	III	9		15		5		5		4		11		18	8%	31	13%
	IV	19		7		16		7		13		10		48	20%	24	10%
13 cm.	I	23		16		25		28		24		18		72	30%	62	26%
	II	38		47		40		40		36		39		114	48%	126	53%
	III	8		8		6		6		4		8		18	8%	22	9%
	IV	11		9		9		6		16		15		36	15%	30	13%
Total	I	113		65		129		61		107		73		349	29%	199	17%
	II	179		229		168		272		182		220		529	44%	721	60%
	III	45		44		31		36		40		45		116	10%	125	10%
	IV	63		62		72		31		71		62		206	17%	155	13%
Total without 13 cm. position	I	90	28%	49	15%	104	33%	33	10%	83	26%	55	17%	277	29%	137	14%
	II	141	44%	182	57%	128	40%	232	72%	146	46%	181	57%	415	43%	595	62%
	III	37	12%	36	11%	25	8%	30	9%	36	11%	37	12%	98	10%	103	11%
	IV	52	16%	53	17%	63	19%	25	8%	55	17%	47	15%	170	17%	125	13%

Discussion of Tables XVI-XX

Comparison of size and brightness judgments.

Considering all subjects together, the brightness and size judgments coincide in a large majority of cases (over 70 per cent in the horizontal and over 75 per cent in the vertical positions, both for totals with and totals without the 13 cm. divergence results). The judgments of the second type alone make up over half of all the judgments given. The judgments of the third type are much less numerous than any other kind (approximately 10 per cent of the total). The judgments of the first and fourth types are intermediate between those of the second and third types, the first type being more numerous than the fourth. The second type judgments are decidedly more numerous in the vertical than in the horizontal position. The first type is clearly, the fourth type slightly more frequent in the horizontal than in the vertical position. The third type judgments are almost equal for the horizontal and vertical positions.

Considering the four subjects separately, the results of subject P. form an exception to the extremely small number of judgments of the third type given by the four subjects. In his case alone these are not the most infrequent judgments, being more numerous than those of the fourth type. In the case of each individual subject as well as in the totals for all subjects the first type of judgment was more numerous in the horizontal and the second in the vertical position. The fourth type judgments were also more numerous in the horizontal position for each subject as well as in the totals for all subjects. The third type judgments, however, varied with the different subjects, as to predominance in the vertical or horizontal positions. They were for F. about equal in the vertical and horizontal, for P. slightly more numerous in the horizontal, for A. slightly and for H. very decidedly more numerous in the veritcal position.

A—Comparison of the three sizes of apertures. *Considering the totals of all subjects together,* the judgments of size and brightness tend to coincide most frequently in the 2 cm. aperture results. The totals for this sized opening show the greatest

number of identical judgments and the least number of opposite judgments. The 1 cm. and 4 cm. aperture results are practically equal in this respect and both show this characteristic considerably less frequently than the 2 cm. aperture results.

Considering the four subjects separately, the results with the 2 cm. aperture showed this characteristic more clearly than the results with the two other apertures. With subjects A. and H. this difference in favor of the 2 cm. aperture was decided, with subjects P. and F. the difference was slight. The tendency of the size and brightness judgments to coincide was least for subject F. with the 4 cm. aperture, for subjects H. and A. with the 1 cm. aperture and approximately equal with the 1 cm. and 4 cm. apertures for subject P.

B—Comparison of the five divergences. *Considering the totals of all subjects together,* the judgments of size and brightness tend to coincide most frequently with the 13 cm. divergence and decreasingly with the following divergences, divergence equal to light diameter, 2 x light diameter, ½ light diameter and, least of all, in the 0 divergence. The difference between the several divergences in this respect is, however, very slight. It appears more in the difference in the number of judgments of the third type which occur in the various divergences than in a difference in the number of judgments of the first and second types.

Considering the four subjects separately, there is relatively little uniformity in the order of divergences with regard to the tendency of the size and brightness judgments to coincide. The divergence equal to the light diameter for instance, shows this characteristic most clearly for subject H., is second in order for subject A. and shows it least noticeably for subjects P. and F. The nearest approach to uniformity among the three subjects is in regard to the 13 cm. divergence. This shows the characteristic in question most clearly for subjects P. and A. and is second in order for subject H.

Sets of Control Experiments

Second Series (Control I)

The effort here was to discover whether, with lights given in the diagonal positions instead of the horizontal and vertical, the tendency to favor the lower light or the tendency to favor the right or left light; or on the other hand, to judge these latter as predominately equal, would dominate the results. Considering the results of all subjects taken together, the judgments on brightness showed a decided tendency to favor the lower light in both diagonal positions, irrespective of whether this was also the right or left light. The preference was strongest when the lower light was also the left light, showing the influence of the strong preference for the left of subject P. The size judgments failed to run parallel with the brightness judgments. They favored the left hand light in both diagonal positions, irrespective of whether it was the upper or lower light. The preference was stronger, however, when the light was both lower and left. This was also conditioned chiefly by the strong preference for the left, of subject P. With the individual subjects the brightness judgments of two (F. and H.) were dominated by the preference for the lower light, this being chosen whether it was left or right. It was stronger where the two preferences coincided, *i.e.* when the light was both lower and left. With the other two subjects the horizontal preference dominated the results, in one case (C.) the right and in the other (P.) the left being chosen in both diagonal positions, irrespective of whether it was the upper or lower. It was strongest, for both of these subjects, when the two types of preference coincided—with C., when the light was both lower and right and with P., when the light was both lower and left. In size judgments the results of P. and H. paralleled the brightness judgments, being dominated in the case of the former by the preference for the left hand light and in the case of the latter by the preference for the lower. With subject F., where the two types of preference "collided" in certain judgments they practically neutralize each other, *i.e.* in judg-

ments between upper-left and lower-right. With subject C. the preference for the lower light dominated the size results, whereas, in the brightness results of this subject, the horizontal preference for the right had done so. Subject H. is, therefore, the only one whose results show the preference for the lower light dominating both the size and brightness results while in subject P. the preference for the left light was the dominant factor in both size and brightness judgments. In the latter case alone is a definite size preference shown for the upper light, being stronger when the light was both upper and left than when it was lower and left. An illuminating comment was made in the introspection of the four subjects. It was reported that they *thought of the lights as still in the horizontal-vertical positions* instead of in the diagonal positions in which, actually, they were shown. One diagonal was accepted as the vertical and the other as the horizontal and this relation was maintained throughout the series of experiments with the oblique judgments. From this point of view the lower light *was* predominantly chosen in the "vertical" position, *i.e.* in that diagonal *thought* of as the vertical, and what appeared in many cases as a judgment favoring the upper light was really a judgment showing the subject's preference for one of the lights in what he was thinking of as the horizontal position. In the case of subject P. alone the preference for one of the lights in this "imaginary horizontal" position was greater than that for the "lower" light in the "vertical." In the first (main) set of judgments with this apparatus his preference for the left hand light had more nearly approximated his preference for the lower than had the horizontal preferences of any of the other subjects—though it had never exceeded the vertical preference as, apparently, it did in this case. F.'s judgments on size with the oblique positions, showing a normal preference for the lower where it was also the left but a practical equality of judgments where the lower was also the right was, according to this interpretation, really her normal judgment of preference for the lower light with practical equality in the "horizontal" judgments. The same was true for the judgments of H. and C. With them

the size judgments in the oblique position regarded as "horizontal" closely approximated equality and the brightness judgments in the same position were very much reduced in inequality. The apparent effect, on the character of the results, of this attitude toward the lights, is particularly striking, as an actual rotation of the head, sufficient to make the lights vertical and horizontal for the eyes, *i.e.* a rotation through 45 degrees, was wholly impossible. The rotation of the head, possible without cutting off the view of the lights, was less than 3 degrees. (See discussion of this point in the conclusion.)

Third Series (Control II)

The only fact brought out in this control series is that the phenomenon is perfectly evident with binocular as well as with monocular vision. It was somewhat less striking, both for the individual subjects and in the results for all subjects taken together, and there was a slightly larger number of judgments favoring the right or left light but the phenomenon was clearly apparent throughout and appeared with about the same relative importance for the different subjects as in the main series with this apparatus (right eye only).

Fourth Series (Control III)

In this series of judgments, with the left eye, the phenomenon appears in a manner quite comparable with the results of the main series with this apparatus, made with the right eye. This applies both to the results of the individual subjects and to the results of all subjects taken together. The one possible exception is in the case of the subject P., with whom the phenomenon appeared somewhat more clearly in this series than in the main series. His judgments favoring the lower light were more numerous in this series and the judgments in the horizontal position more closely approached equality. Such preference as was shown, however, in the horizontal position was in the same direction as in the main series of results with the right eye, viz. in favor of the left light.

Fifth Series (Control IV)

The particular object of this series, with a permanent fixation, was to determine whether or not the order in which the lights were fixated or the direction from which the eye moved to the different lights had any important influence on the appearance of the phenomenon. While the fixation of the subject's eye was established in this series midway between the two lights before they were exposed and this fixation was held after the exposure, the judgments were not strictly made by indirect vision as the divergences used were sufficiently small so that, with a fixation midway between the two lights, they could both be seen in direct vision. For three of the subjects the results were, on the whole, quite comparable with those of the main series, with the exception that, for subject C., the size judgments were almost wholly judgments of equality. The phenomenon was not, to be sure, as noticeable as in the main series, the preferences in the horizontal position being relatively more numerous and those for the lower light, in the vertical position, relatively less numerous. The phenomenon was, however, perfectly apparent and the preference in the horizontal position was the same, for each subject, as in the previous series. With subject P. the preference in the vertical position was reversed, the upper light being favored. This preference did not, however, equal that for the left light in the horizontal position.

Sixth Series (Control V)

In this series, with eccentric fixation, the phenomenon appeared with only one subject (C.) and in this case only in the brightness judgments and to the very slightest extent, the preference for the right being practically equal to that for the lower light. With the three other subjects a partial or complete reversal took place in the vertical judgments, the upper light being somewhat more frequently favored than the lower, at least in brightness judgments. With subjects F. and H. this occurred both with the fixation at the left and at the right. With subject F. it was more striking with the fixation at the left and with subject H. with the

fixation at the right. With both subjects it was paralleled by a greater preference for one of the lights in the horizontal position. With subject P. the upper light was very slightly preferred when the fixation point was at the left and the lower when the fixation point was at the right. There was in his case, a very much more striking preference for the left hand light, both with the fixation point above and below. Subject F. alone gave any judgments of inequality in size. They were relatively small in number and, when reported, followed the brightness judgments closely. The lights were uniformly judged of equal size by subject C. in this series and all size judgments were reported as impossible by P. and H. It was evident from the introspective account that the uniform judgments of equality in size, given by subject C., were practically equivalent to a statement that judgments on size were impossible rather than to a definite and positive judgment of equality. They, were, that is, negative judgments. The results with this series are practically negative, the phenomenon appearing with only one subject and there to the very slightest extent and accompanied by an approximately equal preference for one of the lights in the horizontal position.

Seventh Series (Control VI)

In this series four divergences were used which were intermediate between those which showed the phenomenon most clearly in the main series with this apparatus and the smallest divergence used on the second apparatus. In the brightness judgments of all subjects taken together the phenomenon appears to a small extent in the 8 cm. divergence but is paralleled by a greater preference for the left light in the horizontal position. It appears somewhat more clearly in the 13 cm. divergence and without an equal preference for one of the horizontal lights. The reverse preference, for the upper light, is shown in the 18 cm. divergence and the same appears to a slight extent in the 24 cm. divergence with practical equality in the horizontal judgments. The size judgments show a very much larger number of equal judgments throughout and, in the three larger divergences, show no preference for either of the lights in the

vertical position. They are also sensibly equal in the horizontal position, with a slight preference for the left in the 8, 12 and 24 cm. divergences and for the right in the 18 cm. The separate results of the individual subjects do not show any very striking variation from these totals of all subjects. In general they show the phenomenon very slightly or not at all in the larger divergences and paralleled, in the horizontal position, by equally or by more striking preferences for the right or left hand lights. The number of equality judgments in the larger divergences is relatively great, particularly in the vertical position. The one noticeable exception to this is subject P. whose results showed no preference in the vertical position with the 13 cm. divergence but a fairly well marked preference for the upper light with the 18 cm. and 24 cm. divergences and a relatively small number of equality judgments in either the horizontal or vertical positions throughout the four divergences. Practically the phenomenon in question does not occur with the 18 cm. and 24 cm. divergences or, at most, in the slightest degree only and with little uniformity.

Eighth Series (Control VII)

In this series additional screens were used behind one of the lights. These screens were of such a thickness that, when twenty were placed behind one light and none behind the other, the latter was twice as bright as the former by photometric measurement. With subjects H., F. and P. several errors were made when one light had one screen and the other none. The unscreened light was not uniformly judged the brighter. With two screens behind one opening and none behind the other only one error was made by these subjects (by H.). With subject C. several errors were made with two screens behind one opening and none behind the other. The 2 cm. apertures were used and set at the divergence equal to the light diameter (2 cm.). (For relative brightness of the two lights in the four positions, see diagram attached to table 51, p. 115.) The lights were shown six times in the vertical and six times in the horizontal positions for each color and with each degree of screening. Of the thirty-two

misjudgments made, fifteen were cases where the lower, though actually the dimmer, was judged to be the brighter and two were cases where the upper and lower were judged equally bright though the lower was the dimmer. In only two cases was the upper, when actually dimmer, judged to be brighter. In the other thirteen cases the two lights in the horizontal position, though actually unequal, were judged to be equal. In the majority of the cases this misjudgment was in the direction of the subject's normal choice in the horizontal position (as shown in the judgments of the other series). The amount of difference in the two lights which was, with considerable frequency, overlooked by three of the subjects was, therefore, less than one twentieth of one light. It was probably less than this fraction for subject C. also but was larger than for the other subjects. When such difference in actual brightness was overlooked, it predominantly favored the lower light.

Third Apparatus, second series (Control I). Object lights diagonally placed

Two parts are given for each table. In one the judgments are classified as "right" or "left" (first part of table, headed R-L). In the other they are classified as "upper" or "lower" (second part of table, headed U-L). Three colors were used; Yellow, Green and Red. In the second line of these tables, the numbers 1, 2, 3 and 4 represent the four positions in which each light was shown. Thus, the columns headed "1-3" give the judgments made when one of the lights was upper and right, the other lower and left. Three divergences were used: only one aperture (2 cm.).

R-L

TABLE XXI—Individual Results—Subject F.

Divergence		Y 1-3 U	Y 1-3 =	Y 1-3 L	Y 2-4 U	Y 2-4 =	Y 2-4 L	G 1-3 U	G 1-3 =	G 1-3 L	G 2-4 U	G 2-4 =	G 2-4 L	R 1-3 U	R 1-3 =	R 1-3 L	R 2-4 U	R 2-4 =	R 2-4 L	Total 1-3 U	Total 1-3 =	Total 1-3 L	Total 2-4 U	Total 2-4 =	Total 2-4 L
1 cm.	B	0	9	3	0	8	4	0	0	12	2	6	4	0	5	7	0	6	6	0	14	22	2	20	14
	S	0	8	4	7	5	0	0	8	4	4	2	6	2	6	4	2	10	0	2	22	12	13	17	6
2 cm.	B	0	12	0	0	12	0	0	6	6	1	11	0	0	2	10	1	11	0	0	20	16	2	34	0
	S	0	9	3	0	12	0	2	5	5	0	10	2	0	11	1	2	10	0	2	23	11	2	32	2
4 cm.	B	0	5	7	0	12	0	2	8	2	0	12	0	0	2	10	0	6	6	2	15	19	0	30	6
	S	0	8	4	0	9	3	4	8	0	0	12	0	0	8	4	0	9	3	4	24	8	0	30	6
Total	B	0	26	10	0	32	4	2	14	20	3	29	4	0	9	27	1	23	12	2	49	57	4	84	20
	S	0	25	11	7	26	3	6	21	9	4	24	8	2	25	9	4	29	3	8	69	31	15	79	14

U-L

TABLE XXI—Individual Results—Subject F.—(*Continued*)

Divergence		Y 1-3 R	Y 1-3 =	Y 1-3 L	Y 2-4 R	Y 2-4 =	Y 2-4 L	G 1-3 R	G 1-3 =	G 1-3 L	G 2-4 R	G 2-4 =	G 2-4 L	R 1-3 R	R 1-3 =	R 1-3 L	R 2-4 U	R 2-4 =	R 2-4 L	Total 1-3 R	Total 1-3 =	Total 1-3 L	Total 2-4 U	Total 2-4 =	Total 2-4 L
1 cm.	B	0	9	3	4	8	0	0	0	12	4	6	2	0	5	7	6	6	0	0	14	22	14	20	2
	S	0	8	4	0	5	7	0	8	4	6	2	4	2	6	4	0	10	2	2	22	12	6	17	13
2 cm.	B	0	12	0	0	12	0	0	6	6	0	11	1	0	2	10	0	11	1	0	20	16	0	34	2
	S	0	9	3	0	12	0	2	5	5	2	10	0	0	11	1	0	10	2	2	23	11	2	32	2
4 cm.	B	0	5	7	0	12	0	2	8	2	0	12	0	0	2	10	6	6	0	2	15	19	6	30	0
	S	0	8	4	3	9	0	4	8	0	0	12	0	0	8	4	3	9	0	4	24	8	6	30	0
Total	B	0	26	10	4	32	0	2	14	20	4	29	3	0	9	27	12	23	1	2	49	57	20	84	4
	S	0	25	11	3	26	7	6	21	9	8	24	4	2	25	9	3	29	4	8	69	31	14	79	15

R-L

TABLE XXII—Individual Results—Subject H

Divergence		Y 1-3 R	Y 1-3 =	Y 1-3 L	Y 2-4 R	Y 2-4 =	Y 2-4 L	G 1-3 R	G 1-3 =	G 1-3 L	G 2-4 R	G 2-4 =	G 2-4 L	R 1-3 R	R 1-3 =	R 1-3 L	R 2-4 R	R 2-4 =	R 2-4 L	Total 1-3 R	Total 1-3 =	Total 1-3 L	Total 2-4 R	Total 2-4 =	Total 2-4 L
1 cm.	B	1	5	6	7	3	2	0	6	6	4	5	3	0	4	8	4	8	0	1	15	20	15	16	5
	S	0	6	6	5	5	2	1	5	6	3	6	3	1	4	7	2	8	2	2	15	19	10	19	7
2 cm.	B	0	0	12	1	8	3	1	7	4	0	12	0	1	8	3	2	8	2	2	15	19	3	28	5
	S	0	0	12	1	9	2	2	5	5	1	11	0	0	8	4	2	10	0	2	13	21	4	30	2
4 cm.	B	1	5	6	2	9	1	0	9	3	1	9	2	1	10	1	1	9	2	2	24	10	4	27	5
	S	2	7	3	2	9	1	0	10	2	1	8	3	1	11	0	1	8	3	3	28	5	4	25	7
Total	B	2	10	24	10	20	6	1	22	13	5	26	5	2	22	12	7	25	4	5	54	49	22	71	15
	S	2	13	21	8	23	5	3	20	13	5	25	6	2	23	11	5	26	5	7	56	45	18	74	16

U-L

TABLE XXII—Individual Results—Subject H.—(*Continued*)

Divergence		Y 1-3 U	Y 1-3 =	Y 1-3 L	Y 2-4 U	Y 2-4 =	Y 2-4 L	G 1-3 U	G 1-3 =	G 1-3 L	G 2-4 U	G 2-4 =	G 2-4 L	R 1-3 U	R 1-3 =	R 1-3 L	R 2-4 U	R 2-4 =	R 2-4 L	Total 1-3 U	Total 1-3 =	Total 1-3 L	Total 2-4 U	Total 2-4 =	Total 2-4 L
1 cm.	B	1	5	6	2	3	7	0	6	6	3	5	4	0	4	8	0	8	4	1	15	20	5	16	15
	S	0	6	6	2	5	5	1	5	6	3	6	3	1	4	7	2	8	2	2	15	19	7	19	10
2 cm.	B	0	0	12	3	8	1	1	7	4	0	12	0	1	8	3	2	8	2	2	15	19	5	28	3
	S	0	0	12	2	9	1	2	5	5	0	11	1	0	8	4	0	10	2	2	13	21	2	30	4
4 cm.	B	1	5	6	1	9	2	0	9	3	2	9	1	1	10	1	2	9	1	2	24	10	5	27	4
	S	2	7	3	1	9	2	0	10	2	3	8	1	1	11	0	3	8	1	3	28	5	7	25	4
Total	B	2	10	24	6	20	10	1	22	13	5	26	5	2	22	12	4	25	7	5	54	49	15	71	22
	S	2	13	21	5	23	8	3	20	13	6	25	5	2	23	11	5	26	5	7	56	45	16	74	18

R-L

TABLE XXIII—Individual Results—Subject C.

Divergence		Y 1-3 R	Y 1-3 =	Y 1-3 L	Y 2-4 R	Y 2-4 =	Y 2-4 L	G 1-3 R	G 1-3 =	G 1-3 L	G 2-4 R	G 2-4 =	G 2-4 L	R 1-3 R	R 1-3 =	R 1-3 L	R 2-4 R	R 2-4 =	R 2-4 L	Total 1-3 R	Total 1-3 =	Total 1-3 L	Total 2-4 R	Total 2-4 =	Total 2-4 L
1 cm.	B	4	5	3	9	3	0	4	5	3	5	4	3	2	8	2	7	4	1	10	18	8	21	11	4
	S	0	12	0	0	11	1	0	11	1	0	12	0	0	11	1	2	10	0	0	34	2	2	33	1
2 cm.	B	8	4	0	4	3	5	5	5	2	5	5	2	2	6	4	8	4	0	15	15	6	17	12	7
	S	0	7	5	3	8	1	2	7	3	3	8	1	0	8	4	2	9	1	2	22	12	8	25	3
4 cm.	B	3	6	3	9	3	0	2	6	4	12	0	0	6	4	2	8	3	1	11	16	9	29	6	1
	S	2	10	0	1	11	0	3	9	0	5	7	0	2	8	2	0	10	2	7	27	2	6	28	2
Total	B	15	15	6	22	9	5	11	16	9	22	9	5	10	18	8	23	11	2	36	49	23	67	29	12
	S	2	29	5	4	30	2	5	27	4	8	27	1	2	27	7	4	29	3	9	83	16	16	86	6

U-L

TABLE XXIII—Individual Results—Subject C.—(*Continued*)

Divergence		Y 1-3 U	Y 1-3 =	Y 1-3 L	Y 2-4 U	Y 2-4 =	Y 2-4 L	G 1-3 U	G 1-3 =	G 1-3 L	G 2-4 U	G 2-4 =	G 2-4 L	R 1-3 U	R 1-3 =	R 1-3 L	R 2-4 U	R 2-4 =	R 2-4 L	Total 1-3 U	Total 1-3 =	Total 1-3 L	Total 2-4 U	Total 2-4 =	Total 2-4 L
1 cm.	B	2	0	10	10	0	2	3	0	9	6	2	4	7	2	3	6	3	3	12	2	22	22	5	9
	S	2	0	10	11	0	1	0	2	10	5	2	5	6	3	3	8	2	2	8	5	23	24	4	8
2 cm.	B	3	0	9	9	1	2	2	8	2	7	3	2	5	4	3	10	2	0	10	12	14	26	6	4
	S	4	0	8	8	2	2	2	7	3	8	4	0	6	5	1	10	2	0	12	12	12	26	8	2
4 cm.	B	0	0	12	3	3	6	10	2	0	10	1	1	4	2	6	7	1	4	14	4	18	20	5	11
	S	9	0	3	6	3	3	8	4	0	6	4	2	3	2	7	7	1	4	20	6	10	19	8	9
Total	B	5	0	31	22	4	10	15	10	11	23	6	7	16	8	12	23	6	7	36	18	54	68	16	24
	S	15	0	21	25	5	6	10	13	13	19	10	7	15	10	11	25	5	6	40	23	45	69	20	19

R-L

TABLE XXIV—Individual Results—Subject P.

Divergence		Y 1-3 R	Y 1-3 =	Y 1-3 L	Y 2-4 R	Y 2-4 =	Y 2-4 L	G 1-3 R	G 1-3 =	G 1-3 L	G 2-4 R	G 2-4 =	G 2-4 L	R 1-3 R	R 1-3 =	R 1-3 L	R 2-4 R	R 2-4 =	R 2-4 L	Total 1-3 R	Total 1-3 =	Total 1-3 L	Total 2-4 R	Total 2-4 =	Total 2-4 L
1 cm.	B	2	0	10	2	0	10	3	0	9	4	2	6	7	2	3	3	3	6	12	2	22	9	5	22
	S	2	0	10	1	0	11	0	2	10	5	2	5	6	3	3	2	2	8	8	5	23	8	4	24
2 cm.	B	3	0	9	2	1	9	2	8	2	2	3	7	5	4	3	0	2	10	10	12	14	4	6	26
	S	4	0	8	2	2	8	2	7	3	0	4	8	6	5	1	0	2	10	12	12	12	2	8	26
4 cm.	B	0	0	12	6	3	3	10	2	0	1	1	10	4	2	6	4	1	7	14	4	18	11	5	20
	S	9	0	3	3	3	6	8	4	0	2	4	6	3	2	7	4	1	7	20	6	10	9	8	19
Total	B	5	0	31	10	4	22	15	10	11	7	6	23	16	8	12	7	6	23	36	18	54	24	16	68
	S	15	0	21	6	5	25	10	13	13	7	10	19	15	10	11	6	5	25	40	23	45	19	20	69

U-L

TABLE XXIV—Individual Results—Subject P.—(*Continued*)

Divergence		Y 1-3 U	Y 1-3 =	Y 1-3 L	Y 2-4 U	Y 2-4 =	Y 2-4 L	G 1-3 U	G 1-3 =	G 1-3 L	G 2-4 U	G 2-4 =	G 2-4 L	R 1-3 U	R 1-3 =	R 1-3 L	R 2-4 U	R 2-4 =	R 2-4 L	Total 1-3 U	Total 1-3 =	Total 1-3 L	Total 2-4 U	Total 2-4 =	Total 2-4 L
1 cm.	B	4	5	3	0	3	9	4	5	3	3	4	5	2	8	2	1	4	7	10	18	8	4	11	21
	S	0	12	0	1	11	0	0	11	1	0	12	0	0	11	1	0	10	2	0	34	2	1	33	2
2 cm.	B	8	4	0	5	3	4	5	5	2	2	5	5	2	6	4	0	4	8	15	15	6	7	12	17
	S	0	7	5	1	8	3	2	7	3	1	8	3	0	8	4	1	9	2	2	22	12	3	25	8
4 cm.	B	3	6	3	0	3	9	2	6	4	0	0	12	6	4	2	1	3	8	11	16	9	1	6	29
	S	2	10	0	0	11	1	3	9	0	0	7	5	2	8	2	2	10	0	7	27	2	2	28	6
Total	B	15	15	6	5	9	22	11	16	9	5	9	22	10	18	8	2	11	23	36	49	23	12	29	67
	S	2	29	5	2	30	4	5	27	4	1	27	8	2	27	7	3	29	4	9	83	16	6	86	16

TABLE XXV—Results for all four subjects

Divergence		R - L All colors combined 1 - 3 R	=	L	2 - 4 R	=	L	U - L All colors combined 1 - 3 U	=	L	2 - 4 U	=	L
1 cm.	B	23	49	72	59	52	33	23	49	72	33	52	59
	S	12	76	56	26	73	45	12	76	56	45	73	26
2 cm.	B	27	62	55	24	80	40	27	62	55	40	80	24
	S	18	70	56	16	95	33	18	70	56	33	95	16
4 cm.	B	29	59	56	50	68	26	29	59	56	26	68	50
	S	34	85	25	25	91	28	34	85	25	28	91	25
Total	B	79	170	183	133	200	99	79	170	183	99	200	133
	S	64	231	137	67	259	106	64	231	137	106	259	67

Third Apparatus, third series (Control II). Binocular vision. Three colors, three divergences; aperture (2 cm.).

TABLE XXVI—INDIVIDUAL RESULTS—SUBJECT F.

Divergence		Y Horiz R	Y Horiz =	Y Horiz L	Y Vert U	Y Vert =	Y Vert L	G Horiz R	G Horiz =	G Horiz L	G Vert U	G Vert =	G Vert L	R Horiz R	R Horiz =	R Horiz L	R Vert U	R Vert =	R Vert L	Total Horiz R	Total Horiz =	Total Horiz L	Total Vert U	Total Vert =	Total Vert L
1 cm.	B	3	9	0	4	4	4	1	8	3	0	5	7	2	8	2	0	2	10	6	25	5	4	11	21
	S	0	12	0	0	7	5	0	9	3	0	7	5	0	8	4	0	12	0	0	29	7	0	26	10
2 cm.	B	0	8	4	1	3	8	0	10	2	1	5	6	3	5	4	2	2	8	3	23	10	4	10	22
	S	3	3	6	0	4	8	1	11	0	0	8	4	0	9	3	1	11	0	4	23	9	1	23	12
4 cm.	B	2	8	2	0	5	7	2	10	0	0	4	8	0	6	6	0	3	9	4	24	8	0	12	24
	S	4	4	4	0	6	6	4	7	1	0	2	10	0	11	1	1	10	1	8	22	6	1	18	17
Total	B	5	25	6	5	12	19	3	28	5	1	14	21	5	19	12	2	7	27	13	72	23	8	33	67
	S	7	19	10	0	17	19	5	27	4	0	17	19	0	28	8	2	33	1	12	74	22	2	67	39

TABLE XXVII—INDIVIDUAL RESULTS—SUBJECT H.

Divergence		Y Horiz R	Y Horiz =	Y Horiz L	Y Vert U	Y Vert =	Y Vert L	G Horiz R	G Horiz =	G Horiz L	G Vert U	G Vert =	G Vert L	R Horiz R	R Horiz =	R Horiz L	R Vert U	R Vert =	R Vert L	Total Horiz R	Total Horiz =	Total Horiz L	Total Vert U	Total Vert =	Total Vert L
1 cm.	B	0	12	0	0	3	9	3	8	1	1	4	7	0	10	2	0	4	8	3	30	3	1	11	24
	S	0	12	0	1	3	8	3	9	0	1	6	5	0	10	2	0	5	7	3	31	2	2	14	20
2 cm.	B	2	10	0	1	2	9	1	9	2	2	6	4	2	9	1	0	7	5	5	28	3	3	15	18
	S	1	10	1	0	3	9	3	7	2	2	7	3	2	8	2	2	6	4	6	25	5	4	16	16
4 cm.	B	1	9	2	1	6	5	6	5	1	1	7	4	3	8	1	1	6	5	10	22	4	3	19	14
	S	2	8	2	0	6	6	3	8	1	0	9	3	2	8	2	1	7	4	7	24	5	1	22	13
Total	B	3	31	2	2	11	23	10	22	4	4	17	15	5	27	4	1	17	18	18	80	10	7	45	56
	S	3	30	3	1	12	23	9	24	3	3	22	11	4	26	6	3	18	15	16	80	12	7	52	49

TABLE XXVIII—Individual Results—Subject C.

Divergence		Y Horiz R	Y Horiz =	Y Horiz L	Y Vert U	Y Vert =	Y Vert L	G Horiz R	G Horiz =	G Horiz L	G Vert U	G Vert =	G Vert L	R Horiz R	R Horiz =	R Horiz L	R Vert U	R Vert =	R Vert L	Total Horiz R	Total Horiz =	Total Horiz L	Total Vert U	Total Vert =	Total Vert L
1 cm.	B	0	12	0	3	3	6	7	5	0	0	0	12	2	10	0	3	0	9	9	27	0	6	3	27
	S	0	12	0	0	11	1	0	12	0	0	10	2	3	9	0	0	8	4	3	33	0	0	29	7
2 cm.	B	0	9	3	3	4	5	0	12	0	9	3	0	3	9	0	3	2	7	4	30	2	15	9	12
	S	1	11	0	0	12	0	0	12	0	3	9	0	2	10	0	0	11	1	3	33	0	3	32	1
4 cm.	B	1	3	8	4	2	6	6	6	0	0	4	8	1	7	4	0	2	10	8	16	12	4	8	24
	S	0	12	0	2	5	5	0	12	0	0	9	3	0	12	0	0	10	2	0	36	0	2	24	10
Total	B	1	24	11	10	9	17	13	23	0	9	7	20	6	26	4	6	4	26	21	73	14	25	20	63
	S	1	35	0	2	28	6	0	36	0	3	28	5	5	31	0	0	29	7	6	102	0	5	85	18

TABLE XXIX—Individual Results—Subject P.

Divergence		Y Horiz R	Y Horiz =	Y Horiz L	Y Vert U	Y Vert =	Y Vert L	G Horiz R	G Horiz =	G Horiz L	G Vert U	G Vert =	G Vert L	R Horiz R	R Horiz =	R Horiz L	R Vert U	R Vert =	R Vert L	Total Horiz R	Total Horiz =	Total Horiz L	Total Vert U	Total Vert =	Total Vert L
1 cm.	B	2	3	7	0	0	12	0	0	12	0	0	12	4	0	8	0	0	12	6	3	27	0	0	36
	S	0	2	10	0	0	12	0	1	11	0	0	12	3	0	9	0	0	12	3	3	30	0	0	36
2 cm.	B	0	4	8	0	2	10	3	6	3	0	1	11	6	3	3	0	0	12	9	13	14	0	3	33
	S	0	1	11	0	3	9	3	4	5	0	0	12	6	4	2	0	1	11	9	10	17	0	4	32
4 cm.	B	3	0	9	6	1	5	6	0	6	5	0	7	9	3	0	1	3	8	15	3	18	12	4	20
	S	3	0	9	5	0	7	1	3	8	0	0	12	3	0	9	1	5	6	7	3	26	6	5	25
Total	B	5	7	24	6	3	27	9	6	21	5	1	30	19	6	11	1	3	32	30	19	59	12	7	89
	S	3	3	30	5	3	28	4	9	23	0	0	36	12	4	20	1	6	29	19	16	72	6	9	93

TABLE XXX—Results of all four subjects together

Divergence		Horiz R	Horiz =	Horiz L	Vert U	Vert =	Vert L
1 cm.	B	24	85	35	11	25	108
	S	9	96	39	2	69	73
2 cm.	B	21	94	29	22	37	85
	S	22	91	31	8	75	61
4 cm.	B	37	65	42	19	43	82
	S	22	85	37	10	69	65
Total	B	82	244	106	52	105	275
	S	53	272	106	20	213	199

Third Apparatus, fourth series (Control III). Left eye. Three colors, three divergences, one aperture (2 cm.)

TABLE XXXI—INDIVIDUAL RESULTS—SUBJECT F.

Divergence		Y Horiz R	Y Horiz =	Y Horiz L	Y Vert U	Y Vert =	Y Vert L	G Horiz R	G Horiz =	G Horiz L	G Vert U	G Vert =	G Vert L	R Horiz R	R Horiz =	R Horiz L	R Vert U	R Vert =	R Vert L	Total Horiz R	Total Horiz =	Total Horiz L	Total Vert U	Total Vert =	Total Vert L
1 cm.	B	6	0	6	1	4	7	5	2	5	1	2	9	4	4	4	0	3	9	15	6	15	2	9	25
	S	4	7	1	2	4	6	4	5	3	0	4	8	3	5	4	0	4	8	11	17	8	2	12	22
2 cm.	B	0	9	3	9	1	2	0	12	0	0	0	12	2	10	0	0	0	12	17	7	12	9	1	26
	S	1	8	3	0	5	7	0	12	0	0	12	0	3	8	1	0	12	0	4	28	4	0	29	7
4 cm.	B	2	7	3	1	1	10	4	3	5	4	0	8	4	7	1	0	0	12	10	17	9	5	1	30
	S	3	8	1	3	2	7	2	9	1	0	3	9	1	8	3	0	5	7	6	25	5	3	10	23
Total	B	10	16	10	4	11	21	7	23	6	1	17	18	8	20	8	0	20	16	42	30	36	16	11	81
	S	8	23	5	5	11	20	6	26	4	0	19	17	7	21	8	0	21	15	21	70	17	5	51	52

TABLE XXXII—INDIVIDUAL RESULTS—SUBJECT H.

Divergence		Y Horiz R	Y Horiz =	Y Horiz L	Y Vert U	Y Vert =	Y Vert L	G Horiz R	G Horiz =	G Horiz L	G Vert U	G Vert =	G Vert L	R Horiz R	R Horiz =	R Horiz L	R Vert U	R Vert =	R Vert L	Total Horiz R	Total Horiz =	Total Horiz L	Total Vert U	Total Vert =	Total Vert L
1 cm.	B	7	1	4	2	3	7	5	1	6	2	5	5	5	3	4	2	2	8	17	5	14	6	10	20
	S	6	2	4	2	3	7	4	3	5	2	5	5	4	3	5	3	3	6	14	8	14	7	11	18
2 cm.	B	2	10	0	0	0	12	5	6	1	3	2	7	2	3	7	0	4	8	9	19	8	3	6	27
	S	2	10	0	1	0	11	5	4	3	4	2	6	2	3	7	0	5	7	9	17	10	5	7	24
4 cm.	B	2	7	3	0	6	6	4	7	1	1	3	8	3	7	2	0	2	10	9	21	6	1	11	24
	S	2	8	2	2	4	6	2	10	0	2	2	8	2	7	3	0	2	10	6	25	5	4	8	24
Total	B	11	18	7	2	9	25	14	14	8	6	10	20	10	13	13	2	8	26	35	45	28	10	27	71
	S	10	20	6	5	7	24	11	17	8	8	9	19	8	13	15	3	10	23	29	50	29	16	26	66

TABLE XXXIII—Individual Results—Subject C.

Divergence		Y Horiz R	Y Horiz =	Y Horiz L	Y Vert U	Y Vert =	Y Vert L	G Horiz R	G Horiz =	G Horiz L	G Vert U	G Vert =	G Vert L	R Horiz R	R Horiz =	R Horiz L	R Vert U	R Vert =	R Vert L	Total Horiz R	Total Horiz =	Total Horiz L	Total Vert U	Total Vert =	Total Vert L
1 cm.	B	2	4	6	4	0	8	4	4	4	1	3	8	4	8	0	0	0	12	10	16	10	5	3	28
	S	5	5	2	5	0	7	5	5	2	2	3	7	2	5	5	3	0	9	12	15	9	10	3	23
2 cm.	B	0	12	0	0	8	4	2	10	0	0	3	9	5	0	7	7	0	5	7	22	7	7	11	18
	S	2	10	0	3	3	6	0	10	2	3	3	6	0	11	1	3	3	6	2	31	3	9	9	18
4 cm.	B	2	10	0	1	3	8	0	8	4	0	1	11	3	9	0	0	2	10	5	27	4	1	6	29
	S	3	9	0	1	7	4	3	5	4	2	0	10	2	6	4	2	1	9	8	20	8	5	8	23
Total	B	4	26	6	5	11	20	6	22	8	1	7	28	12	17	7	7	2	27	22	65	21	13	20	75
	S	10	24	2	9	19	17	8	20	8	7	6	23	4	22	10	8	4	24	22	66	20	24	20	64

TABLE XXXIV—Individual Results—Subject P.

Divergence		Y Horiz R	Y Horiz =	Y Horiz L	Y Vert U	Y Vert =	Y Vert L	G Horiz R	G Horiz =	G Horiz L	G Vert U	G Vert =	G Vert L	R Horiz R	R Horiz =	R Horiz L	R Vert U	R Vert =	R Vert L	Total Horiz R	Total Horiz =	Total Horiz L	Total Vert U	Total Vert =	Total Vert L
1 cm.	B	3	6	3	0	0	12	3	5	4	2	0	10	4	5	3	5	1	6	10	16	10	7	1	28
	S	2	6	4	4	5	3	2	6	4	2	0	10	3	7	2	0	0	12	7	19	10	6	5	25
2 cm.	B	6	3	3	0	0	12	2	4	6	4	0	8	3	3	6	0	0	12	11	10	15	4	0	32
	S	2	4	6	0	0	12	5	1	6	0	0	12	0	0	12	0	0	12	7	5	24	0	0	36
4 cm.	B	1	8	3	1	3	8	3	7	2	0	0	12	3	6	3	4	0	8	7	21	8	5	3	28
	S	4	4	4	4	4	4	4	4	4	5	3	4	4	4	4	1	0	11	12	12	12	10	7	19
Total	B	10	17	9	1	3	32	8	16	12	6	0	30	10	14	12	9	1	26	28	47	33	16	4	88
	S	8	14	14	8	9	19	11	11	14	7	3	26	7	11	18	1	0	35	26	36	46	16	12	80

TABLE XXXV—Results of all Four Subjects Together

Divergence		Horiz R	Horiz =	Horiz L	Vert U	Vert =	Vert L
1 cm.	B	52	43	49	20	23	101
	S	44	59	41	25	31	88
2 cm.	B	44	58	42	23	18	103
	S	22	81	41	14	45	85
4 cm.	B	31	86	27	12	21	111
	S	32	82	30	22	33	89
Total	B	128	187	118	55	62	315
	S	98	222	112	61	109	262

Third Apparatus, fifth series (Control IV). Permanent Central fixation. Three colors, three divergences, one aperture (2 cm.)

TABLE XXXVI—INDIVIDUAL RESULTS—SUBJECT F.

Divergence		Y Horiz R	Y Horiz =	Y Horiz L	Y Vert U	Y Vert =	Y Vert L	G Horiz R	G Horiz =	G Horiz L	G Vert U	G Vert =	G Vert L	R Horiz R	R Horiz =	R Horiz L	R Vert U	R Vert =	R Vert L	Total Horiz R	Total Horiz =	Total Horiz L	Total Vert U	Total Vert =	Total Vert L
1 cm.	B	3	1	8	3	9	0	0	11	1	0	6	6	0	3	9	3	0	9	3	15	18	6	15	15
	S	0	12	0	0	12	0	1	11	0	0	6	6	4	8	0	3	9	0	5	31	0	3	27	6
2 cm.	B	6	0	6	0	2	10	3	6	3	0	4	8	1	5	6	1	2	9	10	11	15	1	8	27
	S	6	6	0	0	7	5	3	9	0	0	8	4	0	12	0	0	9	3	9	27	0	0	24	12
4 cm.	B	1	5	6	3	0	9	0	3	9	0	0	12	4	5	3	2	1	9	5	13	18	5	1	30
	S	1	8	3	0	5	7	9	3	0	0	6	6	9	3	0	0	10	2	19	14	3	0	21	15
Total	B	10	6	20	6	11	19	3	20	13	0	10	26	5	13	18	6	3	27	18	39	51	12	24	72
	S	7	26	3	0	24	12	13	23	0	0	20	16	13	23	0	3	28	5	33	72	3	3	72	33

TABLE XXXVII—INDIVIDUAL RESULTS—SUBJECT H.

Divergence		Y Horiz R	Y Horiz =	Y Horiz L	Y Vert U	Y Vert =	Y Vert L	G Horiz R	G Horiz =	G Horiz L	G Vert U	G Vert =	G Vert L	R Horiz R	R Horiz =	R Horiz L	R Vert U	R Vert =	R Vert L	Total Horiz R	Total Horiz =	Total Horiz L	Total Vert U	Total Vert =	Total Vert L
1 cm.	B	6	4	2	2	3	7	4	4	4	3	4	5	8	4	0	2	5	5	18	12	6	7	12	17
	S	4	5	3	2	5	5	4	4	4	3	7	2	5	7	0	0	10	2	13	16	7	5	22	9
2 cm.	B	1	11	0	1	7	4	5	6	1	0	2	10	4	2	6	4	1	7	10	19	7	5	10	21
	S	3	9	0	1	10	1	3	6	3	2	7	3	3	4	5	0	6	6	9	19	8	3	23	10
4 cm.	B	5	4	3	1	1	10	0	7	5	3	6	3	6	5	1	2	1	9	11	16	9	6	8	22
	S	0	9	3	1	5	6	2	7	3	0	12	0	3	9	0	0	5	7	5	25	6	1	22	13
Total	B	12	19	5	4	11	21	9	17	10	6	12	18	18	11	7	8	7	21	39	47	22	18	30	60
	S	7	23	6	4	20	12	9	17	10	5	26	5	11	20	5	0	21	15	27	60	21	9	67	32

TABLE XXXVIII—Individual Results—Subject C.

Divergence		Y Horiz R	Y Horiz =	Y Horiz L	Y Vert U	Y Vert =	Y Vert L	G Horiz R	G Horiz =	G Horiz L	G Vert U	G Vert =	G Vert L	R Horiz R	R Horiz =	R Horiz L	R Vert U	R Vert =	R Vert L	Total Horiz R	Total Horiz =	Total Horiz L	Total Vert U	Total Vert =	Total Vert L
1 cm.	B	12	0	0	8	1	3	9	3	0	6	0	6	1	11	0	0	11	1	21	15	0	15	11	10
	S	0	12	0	0	12	0	0	12	0	0	12	0	0	12	0	0	12	0	0	36	0	0	36	0
2 cm.	B	4	8	0	0	4	8	2	7	3	3	7	2	4	8	0	0	2	10	10	23	3	3	13	20
	S	0	12	0	0	12	0	0	12	0	0	9	3	0	12	0	0	12	0	0	36	0	0	33	3
4 cm.	B	7	2	3	6	0	6	2	10	0	0	3	9	5	4	3	3	0	9	14	16	6	9	3	24
	S	0	12	0	0	12	0	0	12	0	0	12	0	0	12	0	0	12	0	0	36	0	0	36	0
Total	B	23	10	3	14	5	17	13	20	3	9	10	17	10	23	3	3	13	20	45	54	9	27	27	54
	S	0	36	0	0	36	0	0	36	0	0	33	3	0	36	0	0	36	0	0	108	0	0	105	3

TABLE XXXIX—Individual Results—Subject P.

Divergence		Y Horiz R	Y Horiz =	Y Horiz L	Y Vert U	Y Vert =	Y Vert L	G Horiz R	G Horiz =	G Horiz L	G Vert U	G Vert =	G Vert L	R Horiz R	R Horiz =	R Horiz L	R Vert U	R Vert =	R Vert L	Total Horiz R	Total Horiz =	Total Horiz L	Total Vert U	Total Vert =	Total Vert L
1 cm.	B	0	3	9	5	3	4	0	0	12	6	4	2	3	1	8	10	0	2	3	4	29	21	7	8
	S	0	0	12	3	0	9	1	0	11	7	3	2	2	0	10	9	0	3	3	1	32	19	2	15
2 cm.	B	5	1	6	6	0	6	1	4	7	6	3	3	6	0	6	0	3	9	12	5	19	12	6	18
	S	3	0	9	0	3	9	0	5	7	5	4	3	0	0	12	1	2	9	3	5	28	6	9	21
4 cm.	B	9	0	3	11	0	1	0	0	12	6	0	6	3	3	6	7	0	5	12	3	21	24	0	12
	S	3	1	8	9	0	3	0	1	11	5	1	6	3	2	7	12	0	0	6	4	26	26	1	9
Total	B	14	4	18	22	3	11	1	4	31	18	7	11	12	4	20	17	3	16	27	12	69	57	13	38
	S	6	1	29	12	3	21	1	6	29	17	8	11	5	2	29	22	2	12	12	10	86	51	12	45

TABLE XL—RESULTS OF ALL FOUR SUBJECTS TOGETHER

Divergence		Horiz			Vert		
		R		L	U		L
1 cm.	B	45	46	53	49	45	50
	S	21	84	39	27	87	30
2 cm.	B	42	58	44	21	37	86
	S	21	87	36	9	89	46
4 cm.	B	42	48	54	44	12	88
	S	30	79	35	27	80	37
Total	B	129	152	151	114	94	224
	S	72	250	110	63	256	113

Third Apparatus, sixth series. (Control V). Eccentric Fixation (Indirect Vision). Three divergences were used, three colors, one aperture (2 cm.).

In the first line of the table the headings, "Above," "Right," "Below," "Left," indicate the position of the fixation light with reference to the object lights.

TABLE XLI—INDIVIDUAL RESULTS—SUBJECT F.

Divergence		Y				G			
Fixation—		Above Horiz R = L	Right Vert U = L	Below Horiz R = L	Left Vert U = L	Above Horiz R = L	Right Vert U = L	Below Horiz R = L	Left Vert U = L
1 cm.	B	0 10 2	0 12 0	0 11 1	6 6 0	0 8 4	6 2 4	0 7 5	7 5 0
	S	0 9 3	0 12 0	0 12 0	5 7 0	Impos 12	Impos 12	Impos 12	Impos 12
2 cm.	B	4 5 3	6 3 3	0 6 6	12 0 0	5 4 3	2 4 6	0 0 12	3 7 2
	S	Impos 5	Impos 5	Impos 8	Impos 6	Impos 7	Impos 7	Impos 4	Impos 6
		0 4 3	3 4 0	0 4 0	0 6 0	0 2 3	2 2 1	0 5 3	0 6 0
4 cm.	B	7 2 3	6 3 3	0 4 8	12 0 0	2 4 6	1 5 6	0 2 10	11 1 0
	S	3 6 3	0 12 0	0 12 0	0 12 0	Impos 2	Impos 4		
						0 4 6	0 8 0	0 12 0	0 12 0
Total	B	11 17 8	12 18 6	0 21 15	30 6 0	7 16 13	9 11 16	0 9 27	21 13 2
	S	Impos 5	Impos 5	Impos 8	Impos 6	Impos 21	Impos 23	Impos 16	Impos 18
		3 19 9	3 28 0	0 28 0	5 25 0	0 6 9	2 10 1	0 17 3	0 18 0

Divergence		R				Total			
1 cm.	B	3 3 6	3 7 2	0 2 10	5 7 0	3 21 12	9 21 6	0 20 16	18 18 0
	S	Impos 12	Impos 12	Impos 12	Impos 12	Impos 24	Impos 24	Impos 24	Impos 24
						0 9 3	0 12 0	0 12 0	5 7 0
2 cm.	B	1 2 9	4 5 3	0 1 11	6 5 1	10 11 15	12 12 12	0 7 29	21 12 3
	S					Impos 12	Impos 12	Impos 12	Impos 12
		0 9 3	4 6 2	0 5 7	7 5 0	0 15 9	9 12 3	0 14 10	7 17 0
4 cm.	B	2 7 3	5 1 6	3 0 9	7 2 3	2 25 9	12 15 9	3 18 15	18 15 3
	S	Impos 4	Impos 2	Impos 3	Impos 3	Impos 6	Impos 6	Impos 3	Impos 3
		3 5 0	0 10 0	0 7 2	0 9 0	6 15 9	0 30 0	0 31 2	0 33 0
Total	B	6 12 18	12 13 11	3 3 30	18 14 4	15 57 36	33 48 27	3 45 60	57 45 6
	S	Impos 16	Impos 14	Impos 15	Impos 15	Impos 42	Impos 42	Impos 39	Impos 39
		3 14 3	4 16 2	0 12 9	7 14 0	6 39 21	9 54 3	0 57 12	12 57 0

TABLE XLII—INDIVIDUAL RESULTS—SUBJECT H.

Divergence		Y												G											
Fixation—		Above Horiz			Right Vert			Below Horiz			Left Vert			Above Horiz			Right Vert			Below Horiz			Left Vert		
		R	=	L	U	=	L	R	=	L	U	=	L	R	=	L	U	=	L	R	=	L	U	=	L
1 cm.	B	2	10	0	7	5	0	4	8	0	0	7	5	12	0	0	6	6	0	2	10	0	5	7	0
	S	No judgments of size. Impos												No judgments of size. Impos											
2 cm.	B	5	7	0	12	0	0	9	3	0	5	5	2	0	11	1	1	11	0	8	4	0	6	0	6
	S	No judgments of size. Impos												No judgments of size. Impos											
4 cm.	B	0	8	4	7	5	0	6	5	1	0	12	0	0	8	4	7	4	1	6	6	0	8	4	0
	S	No judgments of size. Impos												No judgments of size. Impos											
Total	B	7	25	4	26	10	0	19	16	1	5	24	7	12	19	5	14	21	1	16	20	0	19	11	6
	S																								

Divergence		R												Total											
1 cm.	B	0	9	3	3	3	6	6	6	0	5	7	0	14	19	3	16	14	6	12	24	0	10	21	5
	S	No judgments of size. Impos																							
2 cm.	B	5	2	5	0	12	0	9	0	3	4	6	2	10	20	6	13	23	0	26	7	3	15	11	10
	S	No judgments of size. Impos																							
4 cm.	B	11	1	0	6	6	0	6	4	2	1	4	7	11	17	8	20	15	1	18	15	3	9	20	7
	S	No judgments of size. Impos																							
Total	B	16	12	8	9	21	6	21	10	5	10	17	9	35	56	17	49	52	7	56	46	6	34	52	22
	S																								

TABLE XLIII—INDIVIDUAL RESULTS—SUBJECT C.

Divergence	Fixation—	Y: Above Horiz R	Y: Above Horiz =	Y: Above Horiz L	Y: Right Vert U	Y: Right Vert =	Y: Right Vert L	Y: Below Horiz R	Y: Below Horiz =	Y: Below Horiz L	Y: Left Vert U	Y: Left Vert =	Y: Left Vert L	G: Above Horiz R	G: Above Horiz =	G: Above Horiz L	G: Right Vert U	G: Right Vert =	G: Right Vert L	G: Below Horiz R	G: Below Horiz =	G: Below Horiz L	G: Left Vert U	G: Left Vert =	G: Left Vert L
1 cm.	B	3	7	2	0	9	3	4	8	0	0	6	6	0	11	1	0	10	2	2	10	0	0	12	0
	S	Lights judged equal in size in every case.																							
2 cm.	B	9	1	2	0	5	7	6	6	0	0	4	8	1	11	0	3	7	2	6	6	0	3	2	7
	S	Lights judged equal in size in every case.																							
4 cm.	B	6	6	0	6	6	0	1	2	9	3	5	4	8	4	0	3	8	1	5	7	0	0	2	10
	S	Lights judged equal in size in every case.																							
Total	B	18	14	4	6	20	10	11	16	9	3	15	18	9	26	1	6	25	5	13	23	0	3	16	17
	S																								

Divergence		R: Above Horiz R	R: Above Horiz =	R: Above Horiz L	R: Right Vert U	R: Right Vert =	R: Right Vert L	R: Below Horiz R	R: Below Horiz =	R: Below Horiz L	R: Left Vert U	R: Left Vert =	R: Left Vert L	Total: Above Horiz R	Total: Above Horiz =	Total: Above Horiz L	Total: Right Vert U	Total: Right Vert =	Total: Right Vert L	Total: Below Horiz R	Total: Below Horiz =	Total: Below Horiz L	Total: Left Vert U	Total: Left Vert =	Total: Left Vert L
1 cm.	B	0	11	1	0	5	7	9	3	0	0	6	6	3	29	4	0	23	13	12	22	2	0	24	12
	S																								
2 cm.	B	5	4	3	0	7	5	3	9	0	0	1	11	15	16	5	3	19	14	15	21	0	3	7	26
	S																								
4 cm.	B	1	8	3	6	0	6	6	6	0	3	7	2	15	18	3	15	14	7	12	15	9	6	14	16
	S																								
Total	B	6	23	7	6	12	18	18	18	0	3	14	19	33	63	12	18	56	34	39	58	11	9	45	54

TABLE XLIV—INDIVIDUAL RESULTS—SUBJECT P.

Divergence		Y												G											
Fixation—		Above Horiz			Right Vert			Below Horiz			Left Vert			Above Horiz			Right Vert			Below Horiz			Left Vert		
		R	=	L	U	=	L	R	=	L	U	=	L	R	=	L	U	=	L	R	=	L	U	=	L
1 cm.	B	0	5	7	0	12	0	0	1	11	3	3	6	0	1	11	0	10	2	0	2	10	0	0	12
	S	No judgments of size. Impos												No judgments of size. Impos											
2 cm.	B	3	9	0	3	4	5	0	0	12	6	6	0	0	3	9	0	5	7	0	0	12	4	0	8
	S	No judgments of size. Impos												No judgments of size. Impos											
4 cm.	B	0	1	11	4	2	6	0	0	12	5	4	3	0	1	11	5	7	0	0	3	9	10	0	2
	S	No judgments of size. Impos												No judgments of size. Impos											
Total	B	3	15	18	7	18	11	0	1	35	14	13	9	0	5	31	5	22	9	0	5	31	14	0	22
	S																								
		R												Total											
1 cm.	B	0	2	10	0	2	10	0	3	9	7	2	3	0	8	28	0	24	12	0	6	30	10	5	21
	S	No judgments of size. Impos																							
2 cm.	B	0	4	8	1	5	6	0	0	12	5	0	7	3	16	17	4	14	18	0	0	36	15	6	15
	S	No judgments of size. Impos																							
4 cm.	B	0	0	12	2	10	0	0	1	11	8	0	4	0	2	34	11	19	6	0	4	32	23	4	9
	S	No judgments of size. Impos																							
Total	B	0	6	30	3	17	16	0	4	32	20	2	14	3	26	79	15	57	36	0	10	98	48	15	45
	S																								

TABLE XLV—Results of all Four Subjects Together

Divergence		Fixat'n.	All colors together: Above Horiz R	=	L	Right Vert U	=	L	Below Horiz R	=	L	Left Vert U	=	L
1 cm.	B		20	77	47	25	82	37	24	68	38	38	68	38
	S		Impos		96	Impos		96	Impos		96	Impos		96
	S		0	45	3	0	48	0	0	48	0	5	43	0
2 cm.	B		38	63	43	32	68	44	41	35	68	54	36	54
	S		Impos		84	Impos		84	Impos		84	Impos		84
	S		0	51	9	9	48	3	0	50	10	7	53	0
4 cm.	B		28	62	54	58	63	23	33	52	59	56	53	35
	S		Impos		78	Impos		78	Impos		75	Impos		75
	S		6	51	9	0	66	0	0	67	2	0	69	0
Total	B		86	202	144	115	213	104	98	159	175	148	157	127
	S		Impos		114	Impos		114	Impos		111	Impos		111
	S		6	147	21	9	162	3	0	165	12	12	165	0

Third Apparatus, seventh series (Control VI). Four divergences, intermediate between those of the first series with third apparatus and those used with the second apparatus. Three colors, one aperture (2 cm.)

TABLE XLVI—INDIVIDUAL RESULTS—SUBJECT F.

Divergence		Y Horiz R	Y Horiz =	Y Horiz L	Y Vert U	Y Vert =	Y Vert L	G Horiz R	G Horiz =	G Horiz L	G Vert U	G Vert =	G Vert L	R Horiz R	R Horiz =	R Horiz L	R Vert U	R Vert =	R Vert L	Total Horiz R	Total Horiz =	Total Horiz L	Total Vert U	Total Vert =	Total Vert L
8 cm.	B	5	4	3	8	0	4	1	2	9	0	3	9	4	3	5	1	3	8	9	9	18	10	6	20
	S	0	6	6	0	10	2	6	6	0	0	8	4	9	2	1	0	12	0	15	14	7	0	30	6
13 cm.	B	10	2	0	0	3	9	6	3	3	0	4	8	5	1	6	9	0	3	21	6	9	9	7	20
	S	0	12	0	0	12	0	0	12	0	0	12	0	6	6	0	2	10	0	6	30	0	2	34	0
18 cm.	B	3	7	2	3	9	0	0	11	1	3	3	6	10	0	2	1	5	6	13	17	6	7	18	11
	S	7	5	0	0	9	3	8	4	0	0	12	0	10	2	0	0	9	3	25	11	0	0	30	6
24 cm.	B	2	9	1	0	10	2	4	6	2	0	12	0	5	7	0	0	9	3	11	22	3	0	31	5
	S	2	7	3	0	12	0	0	12	0	0	7	5	4	5	3	0	12	0	6	24	6	0	31	5

TABLE XLVII—INDIVIDUAL RESULTS—SUBJECT H.

Divergence		Y Horiz R	Y Horiz =	Y Horiz L	Y Vert U	Y Vert =	Y Vert L	G Horiz R	G Horiz =	G Horiz L	G Vert U	G Vert =	G Vert L	R Horiz R	R Horiz =	R Horiz L	R Vert U	R Vert =	R Vert L	Total Horiz R	Total Horiz =	Total Horiz L	Total Vert U	Total Vert =	Total Vert L
8 cm.	B	4	5	3	0	0	12	3	5	4	4	3	5	3	7	2	4	4	4	10	17	9	8	7	21
	S	1	11	0	2	0	10	1	9	2	0	12	0	0	12	0	0	12	0	2	32	2	2	24	10
13 cm.	B	2	10	0	8	3	1	2	10	0	0	4	8	6	0	6	0	4	8	10	20	6	8	11	17
	S	0	12	0	2	10	0	0	12	0	0	10	2	4	2	6	0	11	1	4	26	6	2	31	3
18 cm.	B	3	5	4	6	6	0	4	4	4	2	6	4	0	6	6	2	6	4	7	15	14	10	18	8
	S	2	10	0	0	12	0	3	9	0	0	12	0	0	12	0	0	12	0	5	31	0	0	36	0
24 cm.	B	0	12	0	0	12	0	0	12	0	1	8	3	0	11	1	2	7	3	0	35	1	3	27	6
	S	0	12	0	0	12	0	0	12	0	1	11	0	0	11	1	2	10	0	0	35	1	3	33	0

TABLE XLVIII—Individual Results—Subject C.

Divergence		Y Horiz R	Y Horiz =	Y Horiz L	Y Vert U	Y Vert =	Y Vert L	G Horiz R	G Horiz =	G Horiz L	G Vert U	G Vert =	G Vert L	R Horiz R	R Horiz =	R Horiz L	R Vert U	R Vert =	R Vert L	Total Horiz R	Total Horiz =	Total Horiz L	Total Vert U	Total Vert =	Total Vert L
8 cm.	B	8	0	4	6	1	5	7	3	2	5	0	7	3	0	9	0	2	10	18	3	15	11	3	22
	S	0	12	0	0	11	1	0	12	0	0	11	1	0	12	0	0	11	1	0	36	0	0	33	3
13 cm.	B	9	0	3	0	7	5	12	0	0	0	5	7	5	7	0	1	3	8	26	7	3	1	15	20
	S	0	12	0	0	12	0	0	12	0	0	12	0	0	12	0	0	12	0	0	36	0	0	36	0
18 cm.	B	6	6	0	9	3	0	8	4	0	0	9	3	10	2	0	3	7	2	24	12	0	12	19	5
	S	1	11	0	3	9	0	2	10	0	0	10	2	7	5	0	0	12	0	10	26	0	3	31	2
24 cm.	B	0	6	6	2	7	3	8	3	1	0	12	0	6	6	0	3	7	2	14	15	7	5	26	5
	S	0	12	0	0	12	0	0	12	0	0	11	1	0	12	0	0	11	1	0	36	0	0	34	2

TABLE XLIX—Individual Results—Subject P.

Divergence		Y Horiz R	Y Horiz =	Y Horiz L	Y Vert U	Y Vert =	Y Vert L	G Horiz R	G Horiz =	G Horiz L	G Vert U	G Vert =	G Vert L	R Horiz R	R Horiz =	R Horiz L	R Vert U	R Vert =	R Vert L	Total Horiz R	Total Horiz =	Total Horiz L	Total Vert U	Total Vert =	Total Vert L
8 cm.	B	5	0	7	12	0	0	0	3	9	5	0	7	0	6	6	5	3	4	5	9	22	22	3	11
	S	2	1	9	2	3	7	0	3	9	5	2	5	1	5	6	7	1	4	3	9	24	14	6	16
13 cm.	B	6	0	6	8	0	4	0	0	12	2	0	10	3	1	8	8	0	4	9	1	26	18	0	18
	S	3	0	9	6	3	3	0	3	9	0	8	4	3	1	8	6	1	5	6	4	26	12	12	12
18 cm.	B	6	0	6	12	0	0	3	1	8	6	2	4	6	0	6	12	0	0	15	1	20	30	2	4
	S	1	6	5	2	7	3	4	3	5	5	5	2	1	1	10	8	0	4	6	10	20	15	12	9
24 cm.	B	0	8	4	6	0	6	0	4	8	12	0	0	0	6	6	7	5	0	0	18	18	25	5	6
	S	0	8	4	0	9	3	0	8	4	8	4	0	0	9	3	4	5	3	0	25	11	12	18	6

TABLE L—Results of all Four Subjects Together

Divergence		All colors together					
		Horiz			Vert		
		R	=	L	U	=	L
8 cm.	B	42	38	64	51	19	74
	S	20	19	33	16	93	35
13 cm.	B	66	34	44	36	33	75
	S	16	96	32	16	113	15
18 cm.	B	59	45	40	59	57	28
	S	46	78	20	18	109	17
24 cm.	B	25	90	29	33	89	22
	S	6	120	18	15	116	13

TABLE LI—Third Apparatus, Eighth Series (Control VII). Quantitative Evaluation of the Phenomenon. Three Colors were Used, 1 Divergence (2 cm.), 1 Aperture (2 cm.)

	Yellow	Green	Red
Fernald—			
1 Screen	2 errors Judged = in 0 Lower judged brighter in 270	2 errors Lower judged brighter in 270 twice	2 errors Lower judged brighter in 270 twice
2 Screens	All correct	All correct	All correct
Chamberlain—			
1 Screen	2 errors Right judged brighter in 180 Upper judged brighter in 90	4 errors Judged = in 180 twice Judged = in 270 Lower judged brighter in 270	2 errors Judged = in 180 Lower judged brighter in 270
2 Screens	1 error Judged = in 180	1 error Judged = in 270	2 errors Left judged brighter in 0 Lower judged brighter in 270
3 Screens	All correct	All correct	All correct
Perrin—			
1 Screen	3 errors Left judged brighter in 0 Right judged brighter in 180 Lower judged brighter in 270	2 errors Lower judged brighter in 270 Judged = in 0	2 errors Left judged brighter in 0 Upper judged brighter in 90
2 Screens	All correct	All correct	All correct
Hayes—			
1 Screen	2 errors Judged = in 180 Lower judged brighter in 270	2 errors Lower judged brighter in 270 twice	2 errors Judged = in 180 Lower judged brighter in 270
2 Screens		1 error Lower judged brighter in 270	
3 Screens	All correct	All correct	All correct

DIAGRAM OF LIGHTS AS USED IN SERIES EIGHT (TABLE LI)

Right brighter in 0 position
Lower " " 90 "
Left " " 180 "
Upper " " 270 "

The disk, as represented, is set in the 0 position with the screen behind the left hand light. The positions of the lights, referred to in discussion of tables, corresponds to the position of the aperture marked V. When this is at 90 the lights are in the 90 position, etc.

The standard light (unscreened) was of 2 candle power intensity, as measured by the photometer. This was the same as the intensity of the standard light (placed at the 60 cm. division on the tracks) in the second apparatus.

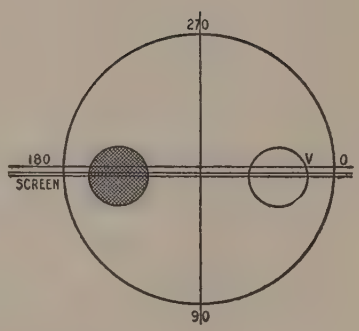

CONCLUSION

The phenomenon in question is evidently not a general or constant characteristic of all judgments on luminous points or areas. It apparently occurs under relatively definite conditions. First, it occurs most clearly, and perhaps exclusively, when the lights are so placed that they may be simultaneously fixated in direct vision (using "direct vision" as synonymous with "occurrence of the retinal image on the fovea"). Second, the effect is predominantly, if not indeed exclusively, concerned with the brightness factor in these experiments. Third, it cannot, in any conclusive way, be correlated with normal right- or left-handedness. Fourth, the appearance of the phenomenon itself cannot, in other than a very indirect manner, be correlated with practice in making these judgments, although such practice apparently does assist in making the phenomenon more evident. Fifth, the phenomenon must apparently be classified strictly as an illusion rather than as an effect dependent on known structural or functional variations in different areas of the retina. These five points will be considered in order.

First. The sizes of the total retinal images, *i.e.* the distances between the outside edges of the images, of the pairs of lights used throughout these experiments are as follows:

	Aperture	Divergence	Total distance between oustide edges of two lights	Retinal image
1—	1 cm.	0	2 cm.	41.2μ
2—	2 cm.	0	4 cm.	82.4μ
3—	4 cm.	0	8 cm.	164.8μ
4—	1 cm.	½x	2.5 cm.	51.5μ
5—	2 cm.	½x	5 cm.	103.0μ
6—	4 cm.	½x	10 cm.	206.0μ
7—	1 cm.	=	3 cm.	61.8μ
8—	2 cm.	=	6 cm.	123.6μ
9—	4 cm.	=	12 cm.	247.2μ

	Aperture	Divergence	Total distance between outside edges of two lights	Retinal image
10—	1 cm.	2x	4 cm.	82.4μ
11—	2 cm.	2x	8 cm.	164.8μ
12—	4 cm.	2x	16 cm.	329.6μ
13—	1 cm.	13 cm.	15 cm.	309.0μ
14—	2 cm.	13 cm.	17 cm.	350.0μ
15—	4 cm.	13 cm.	21 cm.	432.6μ
16—	2 cm.	18 cm.	22 cm.	453.2μ
17—	2 cm.	24 cm.	28 cm.	576.8μ
18—	13 mm.	30 cm.	32.6 cm.	671.6μ
19—	13 mm.	50 cm.	52.6 cm.	1083.6μ
20—	13 mm.	1 M.	102.6 cm.	2113.6μ

Taking the above figures for the retinal distance between the outside edges of the various pairs of images and assuming .4 mm. as the diameter of the fovea, it is apparent that 1, 2, 3, 4, 5, 6, 7, 8, 9, 10, 11, 12, 13 and 14, in the above summary of the retinal areas affected, are all foveal, while 15 is likewise foveal if we accept the larger measurements often given for the fovea: *e.g.*, Fritsch's measurements, from edge to edge of the depression, given as .5 to .75 mm. 19 and 20, the large divergences used on the second form of apparatus, are clearly extra-foveal, *i.e.* when the image of one light is on the fovea the other must in all cases fall outside the fovea. 16 and 17, the largest divergences used in the seventh series (control VI) with the third form of apparatus, and 18, the smallest divergence used with the second form of apparatus, are doubtful. The question of whether or not they may be foveal depends on the estimate of the size of the fovea which we accept. Fritsch's figures (above) would make all three possibly foveal, while Rivers' estimate (Schafer's Physiology) of .2 mm. to .4 mm "or larger" would make them all probably extra-foveal. Taking .5 mm. as the diameter of the rod-free area and .8 mm. as the diameter of the area in which the cones predominate (Koster's measurements), 17, 18, 19 and 20 would extend beyond the rod-free area but only 19 and 20 beyond the area in which the cones predominate. It is difficult to obtain a definite statement of the extent of the area lacking in

rhodopsin. If we accept the statement frequently made, *e.g.*, Schafer and Symington in Quain's Anatomy, Cunningham, Rivers in Schafer's Physiology, etc., that it is lacking throughout the macula lutea we are still in doubt as the actual area in question, as the diameter of the macula is variously given by different authors from .5 mm. to 6 mm. or even larger. (Cunningham, 2 mm. to 3 mm.; Howell, 6 mm.; Dimmer, .5 mm.; Schafer and Symington, 2 mm.; Foster, longest diameter of the oval macula 2 mm.) The smallest of these figures would make the four largest divergences used (1 m., 50 cm., 30 cm., and 24 cm.) extra-macular. The largest estimate of the yellow spot would make the judgments, even on the 1 m. divergence clearly macular; would, in fact, allow of very considerably eye movement without the image of either light falling outside the macula. Assuming the measurement most frequently given for the macula, 2 mm., only the largest divergence, 1 m., would make the images clearly extra-macular. In the eccentric fixation judgments with both the second and third form of apparatus (in which the phenomenon failed to appear) the retinal images of the two lights were clearly extra-foveal. In the judgments with the second form of apparatus in which a central fixation point was used, midway between the two lights, the distance between the outside edges of the retinal images was 671.6 μ so that both images could not simultaneously appear on the fovea; and, in those cases where the image of the fixation point fell inside the central half of the foveal area, neither of the object lights stimulated the fovea. In the judgments with the third form of apparatus, in which a fixation point was used at the side or above the object lights, the images were always extra-foveal. In those cases in which the image of the fixation point fell on the center of the fovea the images of the object lights occurred 402 μ from the edge of the fovea; even when the image of the fixation point fell on the edge of the fovea farthest from the images of the object lights these latter were 210 μ from the near edge of the fovea. In the judgments with the second form of apparatus where fixation points were placed outside the circle

in which the object lights revolved, the images of these latter were still more peripheral, the fixation light being located farther from the line joining the object lights than it was with the third form of apparatus.

In the case of the judgments with the third form of apparatus, tabulated and described as "permanent fixation judgments," (Tables 36-40) where a fixation light was placed between the object lights, the images were all foveal—except in the possible cases of the occurrence of the image of the fixation light on the extreme edge of the fovea, in which cases one image might, of course, be extra-foveal. The phenomenon, though reduced in importance, was perfectly apparent in these judgments, occurring in a quite regular manner for three of the subjects—though reversed for the fourth.

In only one other of the control series did either or both of the images occur outside the fovea. In the series with "varied divergences" (Tables 46-50) the two cases in which the lights were separated by 18 cm. and 24 cm. respectively produced images which were necessarily extra-foveal—one or both, depending on the fixation. In both these cases the phenomenon failed to appear. With the 13 cm. divergence, both in this control series and in the main series with this apparatus, the image of one light might readily become extra-foveal as the result of inaccuracy in the fixation of the other; and in the judgments with this divergence the phenomenon was greatly reduced and not infrequently absent.

The one fact of importance which appears clearly from these measurements and comparisons is that *the phenomenon in question occurs where the distance between the lights is such that they may be simultaneously seen in foveal vision, and that it fails to appear where the distance between the lights is such that they cannot be seen in this way.* That, in the former case, the two images are actually present, simultaneously, on the fovea in every judgment, is, of course, wholly improbable. The known nature of fixation of luminous points in relative darkness would preclude such a supposition. The smaller the distance between

the lights, however, the greater will be the possible eye movement which does not cause either image to occur outside the fovea. It is with these smaller divergences (½ the diameter of one light, equal to the diameter and twice the diameter) that the phenomenon appears most clearly. The failure of the phenomenon to appear as clearly with the 0 divergence is apparently explicable on other grounds, *i.e.* the tendency of the lights to fuse when placed in this position. The phenomenon appears, therefore, to be rather definitely and exclusively concerned with foveal vision. Its occurrence in this area accords with the apparently foveal character of the astronomical observations in which the effect was first noticed. Its exclusive restriction to this area was by no means necessarily implied in the nature of those observations, nor was there any evident reason for supposing that it would be so restricted. In coming to the conclusion, however, that it is limited in it's occurrence to strictly foveal vision we have only succeeded in defining it's retinal scope and a physiological explanation of its occurrence in this area is still to be sought. At present no known structural or functional difference between the upper and lower halves of the fovea has been found to cover the facts. The suggested explanation, based on the brightness difference of the stimulation of the upper and lower halves of the retina in ordinary vision, particularly in out-door vision, is wholly inadequate to cover the facts. It would be natural to assume, on this explanation, that the effect would occur as clearly —if not, in fact, more strikingly—in peripheral judgments, where one image was above and the other below the fovea, as in exclusively foveal estimates of brightness. The inadequacy of this explanation, as a physiological account of the facts, is especially apparent in connection with the absence of any known correlative disparity, of a structural nature, between the lower and upper halves of the fovea.

Second. The effect seems to be predominantly, if not, indeed, exclusively, concerned with the brightness factor. Throughout the series of experiments in which the phenomenon has appeared clearly it has uniformly been more evident in the brightness than

in the size judgments. In those judgments in which the lights have been reported as unequal in one attribute, equal in the other, the inequality has almost exclusively concerned itself with the brightness factor. The total number of cases in which the judgments were the same for brightness and size forms an overwhelming majority of all the judgments, while those in which the two types of judgment favored opposite lights were so infrequent as to be almost negligible for all but one subject. The introspective accounts of the different subjects from an important element in our conclusion that the phenomenon is predominantly concerned with the brightness judgments. There was a uniformly greater certainty of the actual objective inequality of the lights in the brightness factor than in the size factor. This was typically expressed by one subject's comment, several times repeated, that "the lights you show me are more frequently unequal in brightness than in size. I quite often have the feeling that one light actually *is* brighter than the other but only *seems* larger and is really equal to the other in size." Similarly, from another subject, "I wonder whether those lights really are different in size or only seem so"—this latter comment coupled with a complete assurance of the brightness *inequality* of the lights in a *majority* of the judgments. Every one of the subjects was decidedly surprised at being told, at the conclusion of the experiments, that, with the exception of the seventh control series, the lights had always been equal in brightness with the third apparatus. The same information in regard to the relative size of the lights caused very little astonishment. This limitation of the phenomenon to the brightness judgments and the reference of such preference as was shown in the size judgments to a tendency of these to follow the brightness judgments explains, in large part, the failure—or, rather, the reversal—of the familiar "figure 8-letter S illusion" in the judgments on size. It might, perhaps, be more correct to say that the natural tendency toward this illusion with objects of this type prevented the phenomenon from appearing as strikingly in the size as in the brightness judgments. Whichever way we regard it, it seems rather clear that in this set of

experiments the effect *was* predominantly concerned with the brightness judgments, and it is at least a possible interpretation that it was exclusively so concerned.

The results of experiments on size discrimination in peripheral vision and in peripheral versus foveal vision, *e.g.*, H. C. Stevens' results, are evidently not relevant to this experiment. The same applies to the experimental investigations of size discrimination which concern themselves, wholly or in part, with foveal judgments. The evident dependence of the size judgments, in the present experiments, on the brightness factor, as well as the complete reversal of the typical foveal size illusion, offer sufficient reason for excluding these size judgments from consideration in the present case. The relation of such illusions as are represented in the figures of Zöllner, Poggendorf, Müller-Lyer, Wundt, Herring, Loeb, etc., will be considered under the fifth head.

Third. Evidently no correlation can be made between the character of the vertical judgments and normal right or left handedness. One might, however, naturally look here for some explanation of the less noticeable preference for one of the lights in the horizontal position. Nevertheless, the results fail to show any such connection even in the horizontal judgments. Of the five subjects used with the third form of apparatus, one showed a slight preference for the right-hand light, another a decided preference for the left throughout both the main set of experiments and the control series. The third subject, (A), who acted only through the main set, showed a decided preference for the left throughout his judgments and the fourth subject, (C), whose results are limited to the control series, favored the right hand light more frequently. The remaining subject manifested a consistent, though slight, preference for the right in the main series, a more decided choice of the left in the control experiments. Yet all of these subjects were normally right handed. This lack of correlation between the horizontal preference and normal right-handedness is, of course, less noteworthy, when we consider the exclusively foveal nature of the judgments in question, in connection with the probable nature of the cortical representa-

tion of the two foveæ. The characteristic horizontal preference of each subject failed, moreover, to be reversed when the left eye was used instead of the right. This was equally true when binocular vision was substituted for the monocular vision used in most of the experiments.

Fourth. The fact that continued practice in making this type of judgment does not tend to make the phenomenon disappear is, of course, clearly shown in the results. The two subjects with whom it appeared most consistently and in the most striking manner were the ones—and the only ones—who had served throughout the experiments with all three forms of apparatus. The subject, on the other hand, for whom the effect was probably least striking and was complicated by the greatest number of horizontal preferences, as well as actual reversals of the vertical preference, served only in the experiments with the third form of apparatus. The extent to which practice made the phenomenon more apparent is difficult to determine. The experiments with the first two forms of apparatus, in which subjects H. and F. gained a large amount of experience with this form of judgment, practically failed to show the phenomenon at all. They started on the experiments with the third form of apparatus with a large amount of experience in making judgments on the size and brightness of luminous areas. The situation was, however, decidedly different in the two previous series, with the first and second form of apparatus; different in the former case chiefly in regard to the subject's attitude and the character of the lights, in the latter case because of the much greater separation of the lights and the consequent difference in the retinal area stimulated. To what extent this could properly be called practice, with reference to the last series, is very doubtful, and particularly so when it is remembered that the phenomenon failed to appear in the earlier series. During the progress of this last series of experiments there was no striking increase or diminution in the importance which the phenomenon played in the total number of judgments. Any effect which practice may have had is, evidently, only indirectly apparent in the results. It appears chiefly, if at all, in the more or less consistent and unambiguous

occurrence of the phenomenon with subjects who had, respectively, gained a larger or smaller amount of experience in making this type of judgment. It is not evident in any decided and constant increase in the importance of the phenomenon during any one series of experiments nor during the entire group of experiments made with one form of apparatus. The fact of its marked appearance with subjects trained in making these judgments accords with the conditions under which it occurs in astronomical observation.

Fifth. The results of control series one with the third form of apparatus suggest the possibility—even the probability—that the explanation of the phenomenon is not to be found in any *known* structural or functional peculiarities of different areas of the retina, or, more strictly, of the fovea. If, as both the results and the introspective reports on this series strongly indicate, the mental attitude of the subject was a determining factor in these judgments, *i.e.* if merely thinking of the lights as in the horizontal-vertical positions, though they remained in the oblique positions relative to the subject's eye, caused the phenomenon to appear in quite the regular way, then there seems every reason to suppose that the phenomenon in question is much more closely related to an illusion than to differences in the perceptions of identical stimuli dependent on functional or structural differences in the retina. Neither the results of the experiments nor the introspective accounts of the different subjects suggest any satisfactory explanation of the illusion; nor does the literature concerning the various illusions of brightness and size throw any light on the problem. Such explanations of the various forms of illusion as depend *directly* on erroneous judgments of the relative size of different areas are evidently irrelevant to the present discussion, as indicated above. This applies as well to such explanations of the Poggendorf, Zöllner, Müller-Lyer, Loeb types of illusion as to explanations of the figure 8—letter S type of illusion and the well known misjudgment of vertical versus horizontal lines. It seems equally impossible to correlate the type of explanation frequently given for the hori-

zontal-vertical line illusion, *i.e.* the relative ease of eye movement in the two planes, with the present illusion of brightness. It has been suggested, as an explanation of certain horizontal-vertical illusions, that the order in which the objects are fixated has an important, if not a determining, influence on the preference shown. In order to form some evaluation of the importance of this factor the subject was asked to state, in three groups of experiments with the third form of apparatus, the order in which the lights were fixated. Their reports showed that in a majority of cases the light first looked at was the one judged to be brighter. (The size factor is here left out of consideration. Where a size preference was shown it followed, as we have seen, very closely with the brightness preference.) This correlation was by no means uniformly true and the cases in which the lower light was looked at first did not account for all of the cases in which the lower light was judged brighter. Moreover, in a large number of cases the final judgment was made, not after a single look at each of the two lights but after several alternate fixations of the two areas. It is impossible to determine just what proportion of the judgments was made in this way but, on the basis of the introspective reports of the different subjects, it is certain that a considerable proportion was so made—quite possibly a majority. It is difficult to see, therefore, how priority of fixation could have been a determining influence in the appearance of the phenomenon. In the case of prolonged, successive fixation of two relatively intense lights, priority of fixation might possibly be a more important factor, *i.e.* through the effects of fatigue. It is evidently far-fetched, as an explanation, in view of the conditions of these experiments. In order to still further settle this point the control series with a permanent central fixation was made. The subject was requested to hold the fixation of the central point as steadily as possible, before, during and after the exposure of the object lights; in fact, from the time the shutter in front of the eyepiece was raised till it was lowered. Reports of any failure to do this were especially requested. All those judgments in which this report was given were thrown out.

Admittedly a considerable amount of variation in the fixation was possible, unknown to the subject. It is hardly possible, however, that this alteration in fixation could, in the entire ignorance of the subject, have entered into the judgments to such an extent as to form a controlling influence in the results. The subjects were perfectly conscious of the difference in procedure when they fixated, as steadily as possible, the center of one of the lights and when, on the contrary, they allowed their eyes to move "over the surface of the light." Yet the diameter of one light was, with the largest of the three divergences used, only half the distance between the inner edges of the two lights and one third the distance between their centers. In these judgments with a permanent central fixation the phenomenon, as previously stated, appeared with complete clearness, though not, to be sure, as markedly as in the main series. Even this diminution of the phenomenon might be explained in terms of practice, as the length of this control series was not sufficiently great for the subjects to gain a familiarity with this procedure equivalent to that which they had acquired for the main series.

Our final conclusion is, therefore, that in this phenomenon we are confronted with a horizontal-vertical illusion of brightness concerned predominantly with foveal vision. Its occurrence in these experiments corresponds quite exactly with the conditions of astronomical observation, in connection with which it was first brought to our notice. That it is an illusion, strictly, is indicated by the fact that it depends, in part at least, on the mental attitude of the subject. That it is restricted largely, if not exclusively to foveal vision indicates its dependence on functional and hence on structural, peculiarities of this region as contrasted with the rest of the retina. It is impossible, at the present time, to indicate or describe this characteristic of the fovea. It appears equally impossible to offer an adequate explanation of the illusion by analogy with the various types of illusion described and, in part, explained in the literature. The present account can lay claim, therefore, to descriptive value only and can make no pretence of being an adequate explanatory treatment of the facts in question.